Model **GWC**

Gas-Fired Water Boilers

Boiler Manual

- **Installation**
- **Maintenance**
- **Startup**
- **Parts**

WARNING This manual must only be used by a qualified heating installer/service technician. BEFORE installing, read all instructions in this manual and all other information shipped with the boiler. Perform steps in the order given. Failure to comply could result in severe personal injury, death or substantial property damage.

Part number 550-142-056/0411

How it works . . .

1 Integrated boiler control

The integrated boiler control (IBC) responds to signals from the room thermostat, air pressure switch, inlet water sensor and boiler limit circuit to operate the circulators, gas valve, igniter and blower. When a room thermostat calls for heat, the IBC starts the system circulator and blower.

The IBC runs the blower to purge the boiler flue passages, then turns on the igniter and lets it warm up.

After igniter warm-up, the IBC opens the gas valve, turns the igniter off, and checks for flame. The flame must come on within 4 seconds or the IBC will shut down and try the full cycle again.

When the room thermostat is satisfied, the IBC turns off the boiler components and waits for the next heat call.

The IBC indicator lights show normal sequence when the lights are on steady. When a problem occurs, the IBC flashes combinations of lights which indicate the most likely reason for the problem.

2 Transformer

The control transformer reduces line voltage to 24 volts for the gas valve and limit circuit.

3 Blower

The blower pulls in air and mixes it with gas from the gas valve. The blower forces this mixture into the burner for combustion inside the boiler chamber.

4 Recuperator

The recuperator is a stainless steel heat exchanger that increases boiler efficiency by extracting additional heat from the flue gases. Return water passes through the recuperator before entering the boiler.

5 Water temperature limit switch

The water temperature limit switch turns off the gas valve if the temperature in the boiler goes above its setting. (The circulators will continue to run as long as there is a call for heat.)

6 System circulator

The system circulator circulates water through the external (system) piping. The flow rate of the circulator is controlled by the IBC, depending on the temperature of the water entering the boiler sections. Pump must remain on boiler — do not remove.

7 Bypass circulator

The IBC operates the bypass circulator to mix hot water from the boiler outlet with colder return water from the system as needed to prevent condensation of flue gases in the cast iron heat exchanger.

When the water returning to the boiler is below 140°F, the IBC regulates the bypass circulator and system circulator flow rates to raise the return water temperature up to 140°F before it enters the cast iron sections. By balancing these flow rates, the IBC can protect against condensation in the cast iron heat exchanger even if return water is as low as 60°F.

Pump must remain on boiler — do not remove.

8 Air pressure switch

The air pressure switch signals the IBC, telling the control whether air is moving through the blower.

9 Water temperature sensor

The water temperature sensor monitors the temperature of the water entering the boiler sections. The sensor sends this information to the IBC. The IBC determines how much to adjust the circulator flow rates to provide at least 140°F water to the cast iron heat exchanger.

LEGEND

a Supply to system, 1” NPT

b Return from system, 1” NPT

c Combustion air inlet fitting — 3” PVC connection

d Flue outlet — 3” PVC connection

e Gas valve — negative pressure regulated gas control

f Pressure/temperature gauge

g Flueway inspection port cover

h Sensor hose trap

i Manual air vent

j Relief valve

k Thermal fuse — a one-time fuse device that shuts boiler off if flue temperature exceeds its setpoint

m Condensate trap line — shipped loose with boiler, field installed

n Condensate drain connection — ½” PVC female

⚠WARNING

This boiler uses a negative-pressure-regulated gas valve, set for an outlet pressure approximately –0.20” water column.

DO NOT set the outlet pressure higher than factory setting.

GWC Water Boiler

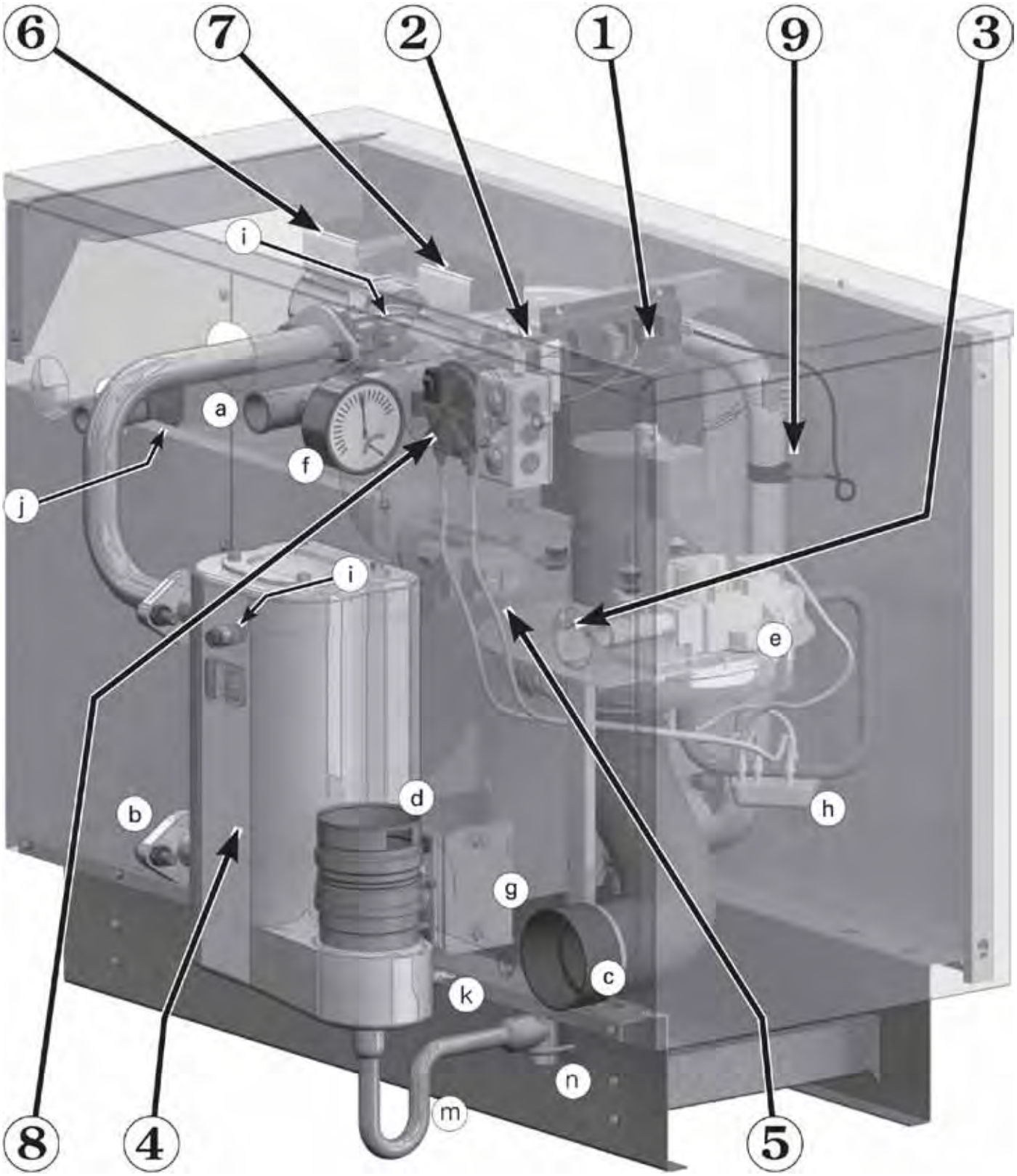

Contents

How it works 2

GWC Water Boiler 3

Please read before proceeding . . . 5

Prepare boiler location 6
- Installations must follow these codes: . . . 6
- High altitude installations. 6
- Residential garage installation 7
- Check orifice plate — replace if necessary . 8
- Install condensate trap. 9
- Install high altitude air pressure switch when required (only above 5,500 feet) 10
- Rotate the boiler into position 10
- Perform hydrostatic pressure test. 11

Install water piping 12
- General piping information. 12
- Install relief valve 12
- Expansion tank. 13
- System water piping methods. 15
- Circulators 15
- Simplified pipe/circulator selection . . . 15
- Baseboard system piping — CIRCULATOR zoning (primary/secondary) 16
- Baseboard system piping — ZONE VALVE zoning (direct connection) 16
- Radiator system piping 18
- Single-zone radiant heating or heat pump 19
- Adjust balancing valves 19
- Multi-zone radiant heating system 20
- Piping snow melt systems or combination snow melt/space heating systems 21
- Water chiller systems 22

Multiple boiler installations 23
- Placing multiple boilers 23
- Controlling multiple GWC boilers 23
- Piping multiple GWC boilers 23

Multiple boiler water piping 24
- Secondary header piping installation. . . 24

Venting & air — general 29
- When removing a boiler from an existing common vent system 29
- Existing vent test procedure. 29
- Provide combustion air:. 30
- Vent and air termination options. 30
- DIRECT VENT installations 30
- DIRECT EXHAUST installations. 30
- Combustion air contamination: 30
- Manifolded combustion air option for DIRECT VENT multiple boiler installations 31
- Air manifold sizing 31

Commonwealth of Massachusetts installations 34

Vent termination requirements . . 35

DIRECT VENT — Boiler room air openings 36

DIRECT VENT — Sidewall with separate pipes. 37

DIRECT VENT — Sidewall with 3” concentric 39

DIRECT VENT — Vertical with separate pipes. 41

DIRECT VENT — Vertical with 3” concentric 43

Concentric termination assembly (sidewall or vertical). 45

Vent and air piping and boiler connections 46
- DIRECT EXHAUST & DIRECT VENT . 46
- Follow termination instructions 46
- Installing vent and air piping 46
- DIRECT EXHAUST ONLY 46

DIRECT EXHAUST — Boiler room air openings 47
- Combustion air provision. 47
- Sizing combustion air openings 47
- Special considerations 47
- GWC boiler WITHOUT other appliances in room. 48
- Air openings 48
- GWC boiler WITH other appliances in room. 48

DIRECT EXHAUST — Sidewall . . 49

DIRECT EXHAUST — Vertical. . . 51

Gas piping 52
- Connecting gas supply piping. 52
- Natural Gas. 53
- Propane Gas 53

Wiring 54

Start-up. 57
- Freeze protection (when used) 57
- Clean system to remove sediment 57
- Water chemistry 57
- Antifreeze. 57
- Check for gas leaks. 58
- Fill and test water system 58
- Verify gas/air orifice plate 59
- Check thermostat circuit(s). 59
- Inspect/fill condensate system 59
- Final checks before starting boiler 60
- To start the boiler 60
- If boiler does not start correctly 60
- Check system and boiler after start-up. . 60
- Gas valve adjustment — altitude over 5,500 feet ONLY 60
- Final checklist 62

Annual start-up and general maintenance schedule 65

Annual start-up 66
- Address reported problems 66
- Inspect boiler area 66
- Inspect boiler interior 66
- Inspect condensate drain system 66
- Inspect all piping for leaks 66
- Inspect gas piping 66
- Inspect the water system. 66
- Check water system chemistry 66
- Inspect expansion tank 67
- Inspect air openings 67
- Inspect vent system and air piping 67
- Inspect boiler heating surfaces 67
- Inspect igniter 67
- Inspect recuperator 68
- Inspect temperature mixing system . . . 68
- Inspect limit controls and cutoffs. 68
- Inspect gauges 68
- Inspect blower motor 68
- Inspect oiled-bearing circulators 68
- Inspect boiler relief valve 69
- To complete Annual Start-up, perform startup and checks: 69
- Review with owner. 69

Service & maintenance 70
- Cleaning boiler heating surfaces 70
- Inspecting and cleaning the recuperator . 71

Troubleshooting 73
- VERIFY PROPER OPERATION AFTER SERVICING. 73
- Before troubleshooting 73
- Check the following 73
- Checking the air pressure switch 73
- Igniter. 74
- Gas Valve 74
- Blower Housing 74
- Thermal fuse 74
- Return temperature sensor 74
- IBC (integrated boiler control) 75
- IBC indicator lights — lockout modes . . 75
- IBC indicator lights — non-lockout modes 75

Replacement parts 87

Dimensions and ratings. 98

NOTES 102

Handling ceramic fiber and fiberglass materials 103

Installation and service certificate 104

Please read before proceeding

Hazard definitions

The following defined terms are used throughout this manual to bring attention to the presence of hazards of various risk levels or to important information concerning the life of the product.

DANGER Indicates presence of hazards that will cause severe personal injury, death or substantial property damage.

WARNING Indicates presence of hazards that can cause severe personal injury, death or substantial property damage.

CAUTION Indicates presence of hazards that will or can cause minor personal injury or property damage.

NOTICE Indicates special instructions on installation, operation or maintenance that are important but not related to personal injury or property damage.

WARNING **Installer**— Read all instructions, including this manual and all other information shipped with the boiler, before installing. Perform steps in the order given.

User — This manual is for use only by a qualified heating installer/service technician. Refer to User's Information Manual for your reference.

User — Have this boiler serviced/inspected by a qualified service technician, at least annually.

Failure to comply with the above could result in severe personal injury, death or substantial property damage.

NOTICE Write in the CP number in the space provided on the Installation certificate on page 104 if not already shown.

When calling or writing about the boiler— Please have the boiler model number from the boiler rating label and the CP number from the boiler jacket.

Consider piping and installation when determining boiler location.

Any claims for damage or shortage in shipment must be filed immediately against the transportation company by the consignee.

Commonwealth of Massachusetts

When the boiler is installed within the Commonwealth of Massachusetts, comply with the following.

- This product must be installed by a licensed plumber or gas fitter.
- If antifreeze is used, a reduced pressure back-flow preventer device shall be used.
- If sidewall vent or vent/air is installed, see instructions on page 34.

WARNING Failure to adhere to the guidelines on this page can result in severe personal injury, death or substantial property damage.

When servicing boiler —

- To avoid electric shock, disconnect electrical supply before performing maintenance.
- To avoid severe burns, allow boiler to cool before performing maintenance.
- This boiler contains ceramic fiber and fiberglass materials. Refer to the WARNING and instructions on page 103.

Boiler operation —

- Do not block flow of combustion or ventilation air to boiler.
- **Should overheating occur or gas supply fail to shut off**, DO NOT turn off or disconnect electrical supply to circulator. Instead, shut off the gas supply at a location external to the appliance.
- **Do not use this boiler if any part has been under water**. Immediately call a qualified service technician to inspect the boiler and to replace any part of the control system and any gas control that has been under water.

Combustion air —

- **DO NOT install combustion air intake where there is a risk of combustion air contamination**.

Carbon monoxide detector —

- For **Direct Exhaust** units, a carbon monoxide detector is required in the boiler room. The carbon monoxide detector must be wired on the same electrical circuit as the boiler.
- For **Direct Vent** units, a carbon monoxide detector that is wired on the same electrical circuit as the boiler is strongly recommended.

Boiler water —

- Thoroughly flush the system (without boiler connected) to remove sediment. The high-efficiency heat exchanger can be damaged by build-up or corrosion due to sediment.
- Do not use petroleum-based cleaning or sealing compounds in boiler system. Gaskets and seals in the system may be damaged. This can result in substantial property damage.
- **Leaks in boiler or piping must be repaired at once to prevent make-up water. Use this boiler ONLY in a closed-loop system.** Continual fresh make-up water will reduce boiler life. Mineral buildup in heat exchangers reduces heat transfer, overheats the materials, and causes failure. Addition of oxygen carried in by make-up water can cause internal corrosion.
- **Do not add cold water to hot boiler.** Thermal shock can cause heat exchanger to crack.

Freeze protection fluids —

- NEVER use automotive or standard glycol antifreeze. Use only freeze-protection fluids made for hydronic systems. Follow all guidelines given by the antifreeze manufacturer. Thoroughly clean and flush any replacement boiler system that has used glycol before installing the new boiler.

Prepare boiler location

Installations must follow these codes:

- Local, state, provincial, national codes, laws, regulations and ordinances.
- National Fuel Gas Code, ANSI Z223.1- latest edition.
- Standard for Controls and Safety Devices for Automatically Fired Boilers, ANSI/ASME CSD-1, when required.
- National Electrical Code.
- For Canada only: B149.1 or B149.2 Installation Code and CSA C22.1 Canadian Electrical Code Part 1 and any local codes.

The GWC boiler gas manifold and controls met safe lighting and other performance criteria when boiler underwent tests specified in ANSI Z21.13 — latest edition.

NOTICE For the Commonwealth of Massachusetts, read and follow the special instructions located on page 34 of this manual.

WARNING Install the boiler so control system components are **protected from dripping or spraying water or rain** during operation. Allowing these components to become wet could cause a boiler failure, resulting in severe personal injury, death or substantial property damage.

High altitude installations

GWC boiler controls automatically reduce input with increasing altitude. See Figure 1 for estimated input at altitude as a percentage of sea level input. Multiply the boiler sea level input by this percentage to obtain the estimated high altitude input. Note that the length of the venting system will also have a minor impact on input.

No modifications to the boiler should be necessary for installations up to 5,500 feet above sea level. For higher elevations, the air pressure switch must be changed to a special high altitude switch. Refer to the high altitude kit instructions, page 10. Note that the gas valve outlet pressure must be checked (and adjusted if necessary) following instructions on page 60.

NOTICE **DO NOT sidewall vent DIRECT EXHAUST APPLICATIONS** at altitudes above 5,500 feet. Sidewall venting is only allowed for **DIRECT VENT** applications (ducted combustion air) at altitudes above 5,500 feet.

NOTICE Vent length also affects boiler input — the boiler automatically derates to compensate for pressure loss through the vent. See the derate values given in Figure 105, page 99. For high altitude installations, multiply the % in Figure 1 times the value shown in Figure 105 to determine input vs sea level.

Service clearances

When possible, install GWC boilers with clearances at least as large as shown in Figure 2 for best service access.

Flooring

The GWC boiler is approved for installation on combustible flooring, but must never be installed on carpeting.

WARNING Do not install boiler on carpeting even if foundation is used. Fire can result, causing severe personal injury, death or substantial property damage.

Figure 1 Estimated GWC input at altitude

Altitude (feet)	% Sea level input
1,000	97
2,000	93
3,000	90
4,000	87
5,000	83
5,500	82
6,000	80
7,000	77
8,000	74
9,000	72
10,000	69

Figure 2 Service clearances (recommended)

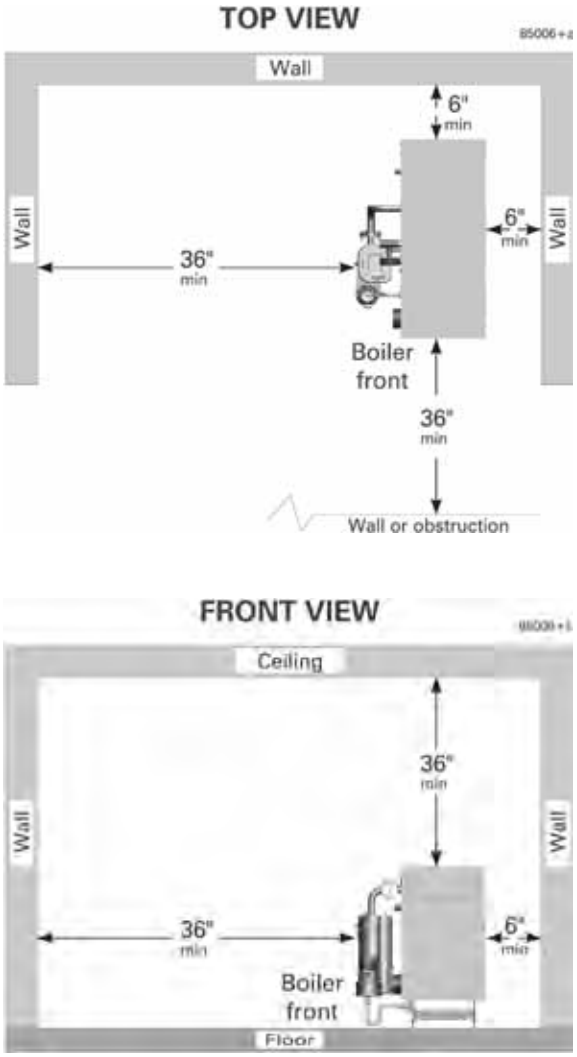

Prepare boiler location *(continued)*

Foundation

Provide a solid brick or concrete foundation pad if any of the following is possible:

- When the floor can become flooded.
- When the boiler mounting area is not level.
- When a high-profile condensate pump is used, provide a foundation high enough that the GWC condensate connection is at least as high as the condensate pump inlet connection.

Figure 3 Minimum foundation dimensions (inches)

Boiler model	W	L	H *
GWC-070 GWC-105	16	30¾	2
GWC-140 GWC-175	16	37¾	2

* Increase height if needed to ensure condensate trap outlet tee is above inlet of condensate pump, when used.

Residential garage installation

Precautions

Take the following special precautions when installing the boiler in a residential garage. If the boiler is located in a residential garage, per *ANSI Z223.1, paragraph 5.1.9*:

- Mount the boiler a minimum of **18 inches above the floor** of the garage to assure the burner and ignition devices will be no less than 18 inches above the floor.
- Locate or **protect the boiler** so it cannot be damaged by a moving vehicle.

Minimum clearances

WARNING You can install GWC boilers in spaces smaller than Figure 2, page 6 recommended service clearances, but never smaller than shown in Figure 4.

Installations with clearances less than shown in Figure 2, page 6 must have air openings sized and located as shown in Figure 4.

- Always provide at least screwdriver clearance to jacket front panel screws for removal of front panel for inspection and minor service.
- If the boiler **cannot be serviced in place**, pipe the boiler with unions and isolation valves so it can be slid out of the space and serviced in an adjacent area.
- The space has to be equipped with a door so boiler can be accessed, unpiped and removed.

Figure 4 Minimum clearances — when clearances are less than recommended service clearances of Figure 2, page 6, install as shown below:

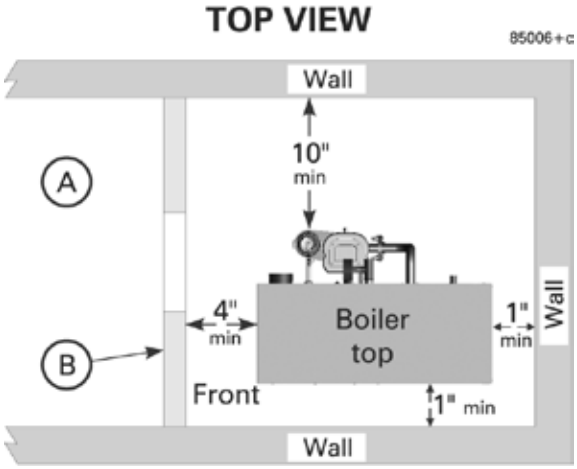

A Area adjacent to access door must be accessible and must allow for removal of the GWC boiler for service.
No other appliance or air mover (exhaust fan, etc.) may be mounted in the same space.

B Access DOOR with fresh air openings

C Provide (2) Fresh air openings — Each with at least 1 sq. inch per 1,000 Btuh of boiler input

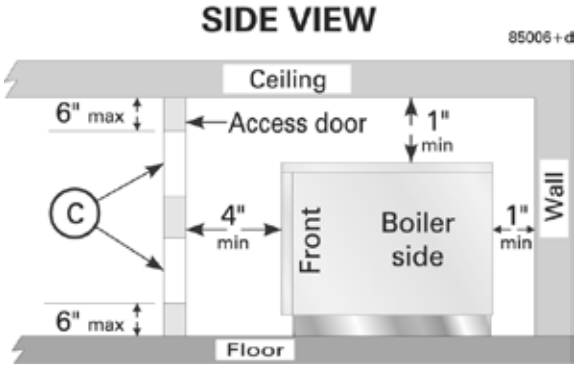

WARNING **NOTICE SPECIAL REQUIREMENTS FOR AIR OPENINGS**: For installations with clearances less than recommended service clearances (Figure 2, page 6), but **no less than shown in Figure 4** — An access door must be provided, fitted with two air openings as shown in Figure 4. Each opening must have a free area no less than 1 square inch per 1000 Btuh input of the GWC boiler in the space. **DO NOT apply the air opening sizes given in Figure 42, page 36 or Figure 56, page 48**.

Prepare the boiler *(continued)*

Check orifice plate — replace if necessary

WARNING The **correct orifice plate** must be used. Failure to do so will result in severe personal injury, death or substantial property damage. **The boiler is shipped with a natural gas orifice plate. It MUST BE CONVERTED to use propane.**

Natural gas:

For natural gas installations, **inspect the silver gas/air orifice plate marking**. It must be the same as the boiler size. If the orifice plate is stamped with another size, obtain the correct plate from your wholesaler. The boiler size is stamped where the "X" is shown in the plate stamping, Figure 6.

Propane:

For propane installations, **replace the silver gas/air orifice plate with the red/white plate**, per following instructions. Ensure the red/white plate boiler size is correct for the GWC boiler being installed. The boiler size is stamped where the "X" is shown in the plate stamping, Figure 6.

Also fill out the propane label in the conversion kit and attach to the left side of the jacket, above the gas inlet opening, as shown in Figure 5.

Orifice plate installation, when required

Access the bottom of the blower housing as shown in Figure 5.

To inspect the plate only, **read the marking on the plate edge**. It must read the same as the boiler size and fuel, as follows:

Boiler model	Natural gas marking	Propane marking
GWC-070	NG 3 SEC	LP 3 SEC
GWC-105	NG 4 SEC	LP 4 SEC
GWC-140	NG 5 SEC	LP 5 SEC
GWC-175	NG 6 SEC	LP 6 SEC

To replace the plate, using a **manual screwdriver or nut driver**, see Figure 6:

1. Loosen screws **1** and **2** two full turns.
2. Remove screws **3** and **4**.
3. Pull the gas/air orifice plate forward to remove it.
4. Slide in the new plate as shown in Figure 6. The **red side of a propane plate must go next to the blower housing**.
5. Replace screws **3** and **4**. Tighten all four screws securely and uniformly. **DO NOT** overtighten. **DO NOT** exceed 40 inch-pounds torque.
6. Bend down plate label tab at score mark as shown in lower right corner of Figure 6, item 10.

WARNING DO NOT use electric or pneumatic screwdrivers to remove or tighten the gas/air boss screws. Hand-tighten only, using manual screwdriver. Should the torque exceed 40 inch-pounds, the threaded holes could strip out, causing an inadequate seal of the orifice plate. Failure to properly seal the plate to the housing could result in a gas leak, causing severe personal injury, death or substantial property damage.

Figure 5 Check for correct gas orifice plate

A Remove jacket front panel to access the bottom side of the blower housing.

B Complete the propane conversion label included with the conversion kit. Install label on jacket left side, as shown.

Leave the boiler on its back, on the skid as shown, until you have checked the gas/air orifice plate and replace it if necessary.

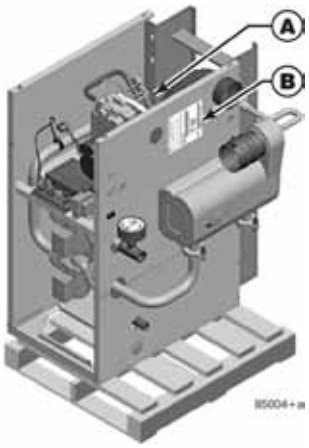

Figure 6 Follow instructions to check or replace gas orifice plate ("X" = boiler size)

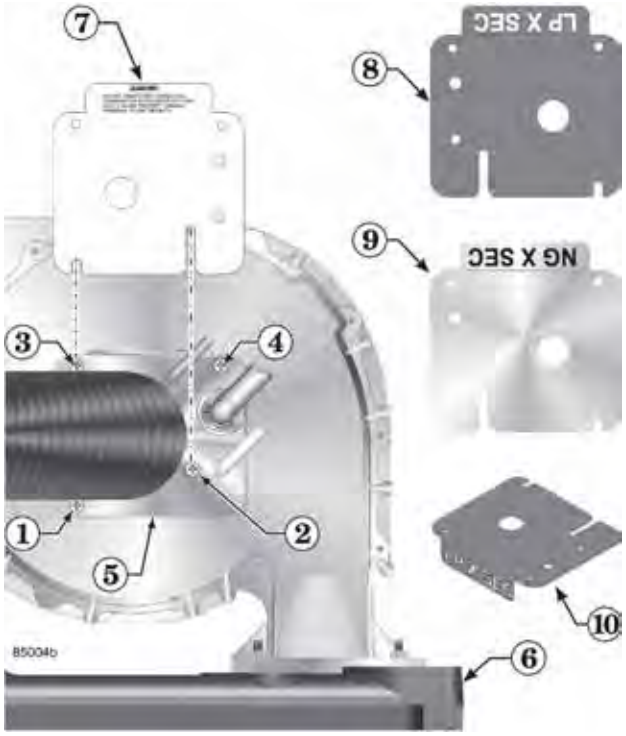

1–4	Screws — follow instructions for loosening and tightening
5	Gas/air manifold
6	Front section, bottom view, component details omitted
7	Side shown must point toward air inlet hose — WARNING label side for natural gas; WHITE side for propane gas
8	Propane orifice plate, RED one side and WHITE on the other (red side must face the blower housing
9	Natural gas orifice plate, SILVER
10	Orifice plate after bending along score mark — label is visible when installed

Prepare the boiler *(continued)*

Install condensate trap

1. Before placing the boiler in position, install the condensate trap line, shown in Figure 7. Items shown are provided with the boiler.

Step 1 Attach the flue drain hose (C) to the in-line flue drain nipple (B).

Step 2 Slide a screw driver or pencil through the condensate drain nipple (G).

Slide the end of the screwdriver or pencil into the open end of the flue drain hose (C).

Feed the in-line flue drain (A) assembly into the flue connection (D), guiding the flue drain hose through the condensate drain nipple (G) with the screwdriver or pencil.

Step 3 Press the in-line flue drain (A) into the flue connection (D) and through the seal ring until it reaches the stop. Then tighten the flue connection hose clamp to secure.

The flue drain hose (C) should now extend down past the end of the condensate drain nipple (G).

Step 4 Slide the U-clamp (F) over the condensate trap tee (E) and into the two holes in the rail. Attach the two nuts provided to the U-clamp and tighten to secure the condensate trap tee to the rail.

Step 5 Slide the ends of the condensate trap hose (H) onto the condensate drain nipple (G) and the condensate trap tee (E). Secure the condensate trap hose at each end with the hose clamps (J).

⚠WARNING **Check the height of the condensate trap tee outlet**. Before rotating the boiler into position, measure the distance from the condensate tee outlet to the bottom of the boiler mounting rails. When the boiler is place in position, the condensate tee outlet must be higher than the condensate pump inlet connection (when a condensate pump is used). Increase the foundation height if necessary.

Figure 7 Install condensate trap

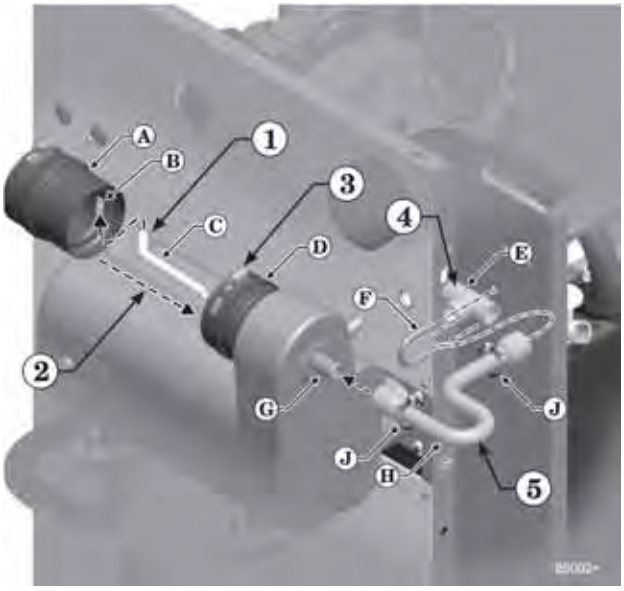

A	In-line flue drain
B	Flue drain nipple
C	Flue drain hose
D	Flue connection
E	Condensate trap tee
F	U-clamp and nuts (not shown)
G	Condensate drain nipple
H	Condensate trap hose
J	Hose clamps

Finished assembly

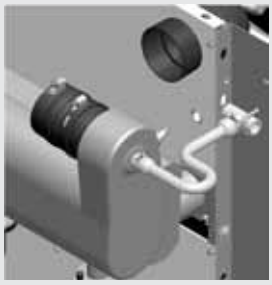

Prepare the boiler *(continued)*

Install high altitude air pressure switch when required (only above 5,500 feet)

1. For installations at altitude more than 5,500 feet above sea level:
   a. A special high altitude air pressure switch is required.
   b. The gas valve outlet pressure setting must be checked, and adjusted if necessary, per the instructions on page 60.

WARNING Failure to check gas valve outlet pressure and adjust, if necessary, could result in severe personal injury, death or substantial property damage. Carefully follow the guidelines given in this manual.

2. Obtain the GWC high altitude kit from your local Williamson-Thermoflo distributor. The high altitude kit contains the high altitude air pressure switch.
3. See Figure 8 (switch shown with wires removed).
   a. Remove the two (RED) control wires from the air pressure switch spade terminals.
   b. Remove the factory-installed air pressure switch (loosen top screw and remove bottom screw holding switch to jacket interior panel).
   c. Install the high altitude air pressure switch in the same location.
   d. Carefully replace the hoses on the new switch, with the red hose on the hose barb closest to the electrical spade connectors, as shown in Figure 8. The white hose goes on the other hose barb.
   e. Replace the two (RED) control wires on the new pressure switch spade terminals.

Figure 8 Air pressure switch mounting

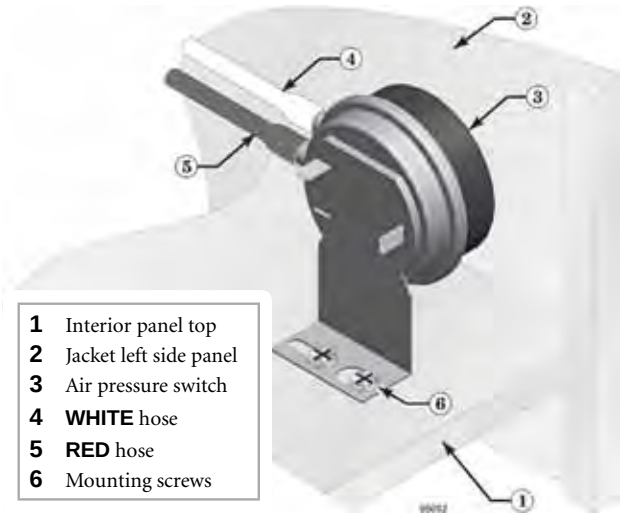

Rotate the boiler into position

CAUTION Boiler is shipped on back side. It must be taken off skid and rotated into correct position.

After installing condensate line, inspecting (replacing if necessary) the gas/air orifice and installing the high altitude kit (if required), move the boiler near its position.

Figure 9 shows the boiler with the front and top panels replaced. These panels may be left off if desired until the installation has been completed.

DANGER Boiler is heavy and contains some sheet metal parts which may have sharp edges. Wear gloves when handling and take proper precautions when moving. Failure to do so will result in severe personal injury, death or substantial property damage.

Refer to Figure 9 for placement sequence as follows:

1 **Wear heavy gloves** — carefully rotate the boiler over onto its base rail legs.

2 **Clip the shipping strap** securing the skid to the boiler block assembly. Remove the skid and strap.

3 Attach the **jacket rear panel** as shown using (4) #10 x ½" screws provided in the accessory bag.

Figure 9 Follow instructions to perform the steps shown below

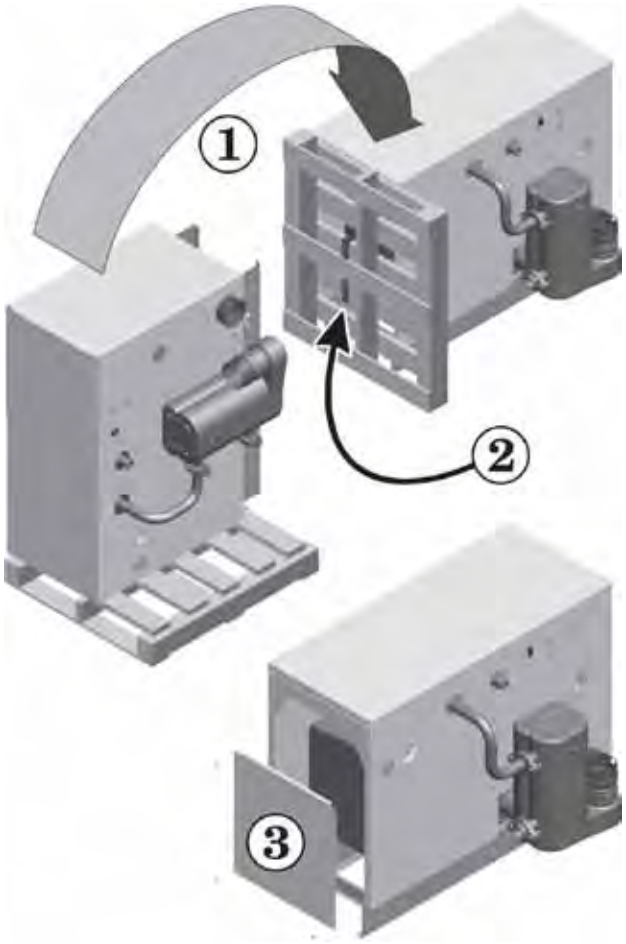

Prepare the boiler *(continued)*

Perform hydrostatic pressure test

Pressure test boiler **before** attaching water or gas piping (except as noted below) or electrical supply. Remove jacket top panel before proceeding.

WARNING **Use two wrenches when tightening water piping at boiler**, using one of the wrenches to prevent the boiler interior piping from turning. Failure to support the boiler piping connections to prevent them from turning could cause damage to boiler components.

Prepare boiler for test — see Figure 10

Step 1 Connect a hose from water supply to fill and drain boiler for hydrostatic test. Hose is not included with boiler.

Step 2 Connect hose to boiler drain valve. Make sure hose can also be used to drain boiler after test.

Step 3 Remove 1" nipple, 1" tee, bushing and pressure/temperature gauge from accessory bag. Pipe to boiler supply connection as shown. Use pipe dope sparingly.

Step 4 Connect a nipple and shutoff valve to system supply connection on the 1" tee. This valve will be used to bleed air during the fill. Valve and nipple are not included with boiler.

Step 5 Connect a nipple and shutoff valve to system return connection at circulator flange. This valve will be used to bleed air during the fill. Valve and nipple are not included with boiler.

Step 6 Install a ¾" pipe plug in the relief valve opening, top of the rear boiler section, as shown. Plug is not included with boiler.

Fill and pressure test

1. Connect fill water supply through drain valve, item 2.
2. Fill boiler with water (be sure bleed valves at 4 and 5 are open).
3. When water flows from bleed valves, shut off water at drain valve.
4. Close bleed valves.
5. Slowly reopen drain valve (item 2) until test pressure of 45 PSIG (or 1.5 times boiler relief valve setting — NEVER MORE than 75 PSIG) is reached on the pressure gauge.
6. Test at this pressure for no more than 10 minutes.

WARNING Do not leave boiler unattended. If the boiler is filled with cold water, the water can absorb heat from the room and expand, causing excessive pressure, resulting in severe personal injury, death or substantial property damage.

7. Make sure constant gauge pressure has been maintained throughout test. Check for leaks. Repair if found.

WARNING Leaks must be repaired at once. Failure to do so can damage boiler, resulting in substantial property damage.

DANGER Do not use petroleum-based cleaning or sealing compounds in boiler system. Severe damage to boiler will occur, resulting in substantial property damage.

Figure 10 Piping connections for hydrostatic test

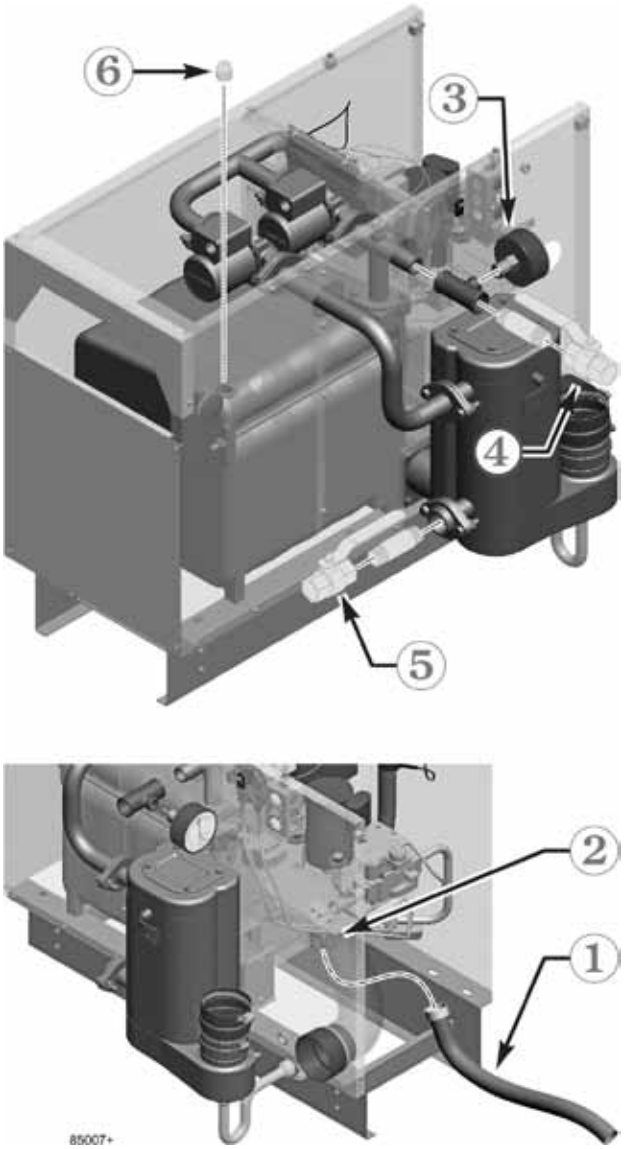

Drain and remove fittings

1. Disconnect fill water hose from water source.
2. Drain boiler at drain valve or out hose, whichever provides best access to drain. Close drain valve and remove hose after draining.
3. Remove nipples and valves at 4 and 5 unless they will remain for use in the system piping.
4. Remove plug (item 6) from relief valve tapping.

Install water piping

WARNING **Use two wrenches when tightening water piping at boiler**, using one of the wrenches to prevent the boiler interior piping from turning. Failure to support the boiler piping connections to prevent them from turning could cause damage to boiler components.

WARNING The cast iron heat exchanger return temperature must be kept at or above 140°F during all times of operation to prevent possibility of corrosion due to condensation. This is done automatically, using the boiler's internal circulators. DO NOT remove or tamper with these circulators. Failure to comply could result in severe personal injury, death or substantial property damage.

General piping information

Minimum pipe size for boiler loop piping

Figure 11 Provide boiler loop piping no smaller than listed below (based on 20°F temperature rise)

Boiler loop pipe size, Minimum	
GWC-070 or 105	1”
GWC-140 or 175	1¼”

Additional limit controls

Following standard industry practices, if installation is to comply with ASME or Canadian requirements, an additional **high temperature limit** may be needed. Consult local requirements for other codes/standards to determine if needed. Wire as shown in Figure 63, page 54.

- Install a manual reset high temperature limit between the boiler and the isolation valve.
- Wire the manual reset limit in series with the boiler limit control.
- Set the manual reset limit control at least 20°F above the boiler limit control setting (maximum setting 220°F).

Low water cut-off, when required

A **low water cutoff device** is required when boiler is installed above radiation level or by certain state or local codes or insurance companies. Use low water cutoff designed for water installations. Electrode probe-type is recommended. Purchase and install in tee in supply piping above boiler. Wire contact as shown in Figure 63, page 54.

WARNING If boiler is connected to heating coils located in air handling units where they can be exposed to refrigerated air, use flow control valves or other automatic means to prevent gravity circulation during cooling cycle. Circulation of cold water through the boiler could result in damage to the heat exchanger, causing possible severe personal injury, death or substantial property damage.

Backflow preventer

Where required by codes, install a **backflow preventer** in the cold water fill line, as shown in suggested piping diagrams on following pages. Install a check valve if a backflow preventer is not installed.

Air separator

Install an **air separator** in the piping as shown in this manual. For single-zone systems, install the air separator in the return piping as shown in Figure 14, page 14. This allows mounting the automatic air vent and expansion tank off of the separator.

Install relief valve

1. Install relief valve ONLY as shown in Figure 12.
2. Connect discharge piping to safe disposal location, following guidelines in Figure 13, page 13.

Figure 12 Install and pipe relief valve

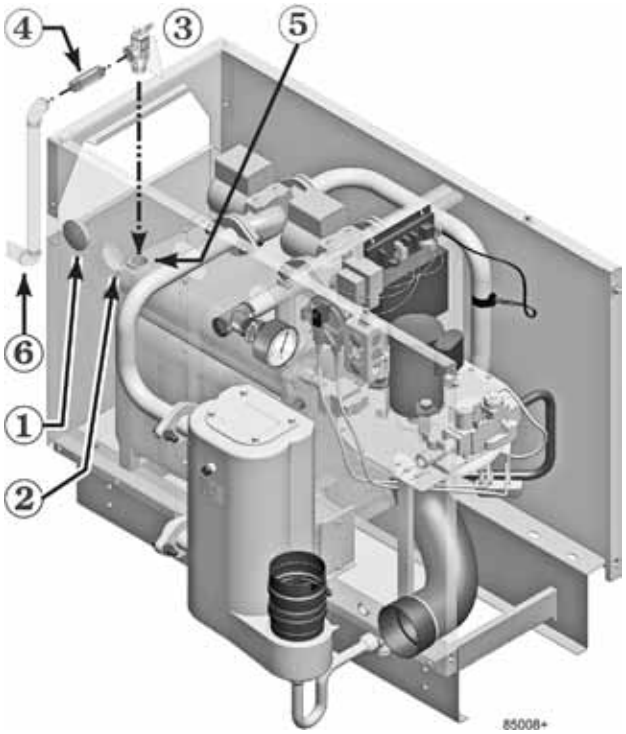

Legend

1 Jacket plug for unused relief valve jacket opening.
2 Jackets are provided with two relief valve openings because each jacket size is used for two boiler sizes. Cover the unused opening with the plug provided.
3 Boiler relief valve (from accessory bag)
4 ¾” x 3” nipple, provided in accessory bag
5 ¾” relief valve tapping in back section
6 Connect minimum ¾” discharge piping to relief valve.

See Figure 13, page 13.

Install water piping *(continued)*

Figure 13 Relief valve installation guidelines

WARNING **To avoid water damage or scalding due to relief valve operation, as per local or state codes**:

Discharge line must be connected to relief valve outlet and run to a safe place of disposal. Terminate the discharge line in a manner that will prevent possibility of severe burns or property damage should the valve discharge.

Discharge line must be as short as possible and be the same size as the valve discharge connection throughout its entire length.

Discharge line must pitch downward from the valve and terminate at least 6" above the floor drain where any discharge will be clearly visible.

The discharge line shall terminate plain, not threaded, with a material serviceable for temperatures of 375°F or greater.

Do not pipe the discharge to any place where freezing could occur.

No shutoff valve shall be installed between the relief valve and boiler, or in the discharge line. Do not plug or place any obstruction in the discharge line.

Test the operation of the valve after filling and pressurizing system by lifting the lever. Make sure the valve discharges freely. If the valve fails to operate correctly, replace it with a new relief valve.

Failure to comply with the above guidelines could result in failure of the relief valve to operate, resulting in possibility of severe personal injury, death or substantial property damage.

Expansion tank

Figure 14, page 14 and Figure 15, page 14 show typical installation of the expansion tank. Always locate the air separator and expansion tank as shown in the suggested piping drawings, beginning with Figure 17, page 16.

Ensure that the expansion tank size will handle boiler and system water volume and temperature. See tank manufacturer's instructions and ratings for details. Additional tanks may be added to the system if needed to handle the expansion. These tanks may be installed by connecting to tees in the system piping.

CAUTION **Undersized expansion tanks** cause system water to be lost from the relief valve and makeup water to be added through the fill valve. Eventual section failure can result. Always locate the **cold water fill connection** at the expansion tank. Never locate this elsewhere in the system.

Diaphragm- or bladder-type tank:

Refer to Figure 14, page 14 for suggested piping when using a diaphragm- or bladder-type expansion tank.

NOTICE **Diaphragm- or bladder-type expansion tank** — Control **fill pressure** with the tank air charge pressure. Always check pressure and charge tank ***with tank removed from system*** to be sure reading is accurate. Boiler relief valve is set for 30 PSIG. Operating pressure of system, after temperature expansion above cold fill pressure, should not exceed 24 PSIG to avoid weeping of relief valve.

Install an **automatic air vent** on top of the air separator, per separator manufacturer's instructions.

Closed-type expansion tank:

Figure 15, page 14 shows suggested piping when using a closed-type expansion tank, in which the air is directly in contact with tank water.

Connect piping (½" or ¾") from the air separator top outlet to the tank fitting. Slope any horizontal piping a minimum of 1 inch per 5 feet of horizontal pipe.

Always use a **tank fitting**, such as the B&G *Tanktrol* or Taco *Taco-Trol* (shown). The fitting reduces gravity flow of water in the piping to the tank, avoids air bubbling through the tank water, and provides the proper fill height in the tank.

CAUTION **Correct all leaks** in the system or tank piping. Leaks allow air to escape from the system and will cause water-logging of the tank. This will result in water loss through the boiler relief valve due to over-pressurization.

NEVER use an automatic air vent in a system equipped with a closed-type expansion tank. The air removed from the system will cause water-logging of the expansion tank.

NOTICE **Closed-type expansion tank** — Follow tank manufacturer's instructions for **filling the tank**. Typical tank sizing provides for approximately 12 PSIG when the tank is filled to the normal level and system water is cold. Note that boiler relief valve is set for 30 PSIG. Operating pressure of system, after temperature expansion above cold fill pressure, should not exceed 24 PSIG to avoid weeping of relief valve.

Install water piping *(continued)*

Figure 14 Piping to single-zone system using diaphragm- or bladder-type expansion tank. Boiler connections are 1" NPT (supply from 1" tee, return to 1" recuperator

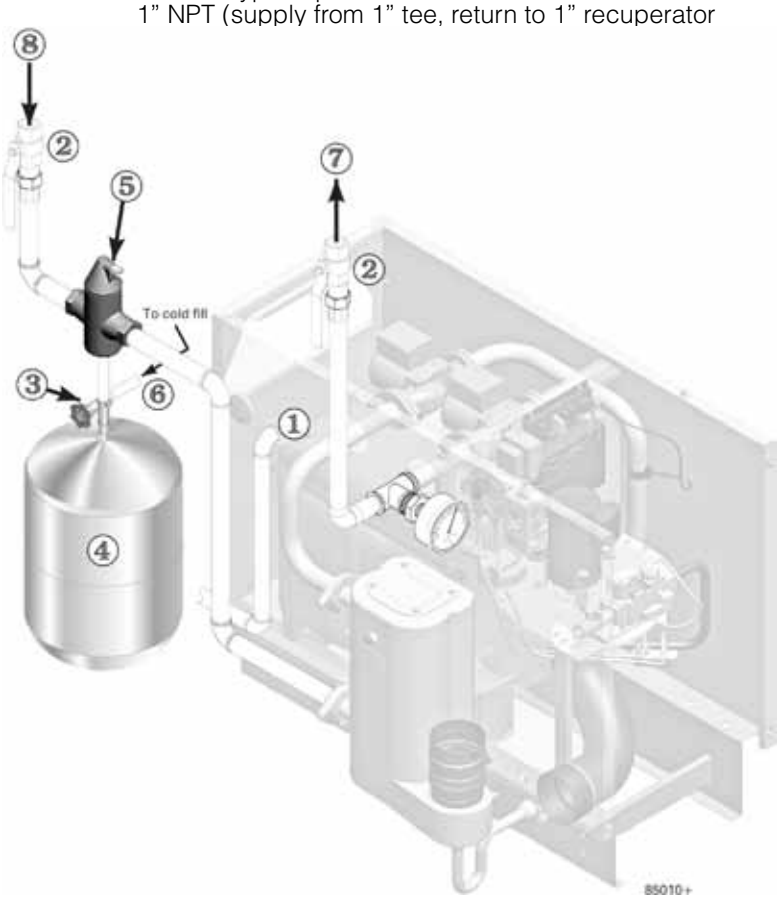

Figure 15 Piping closed-type expansion tank

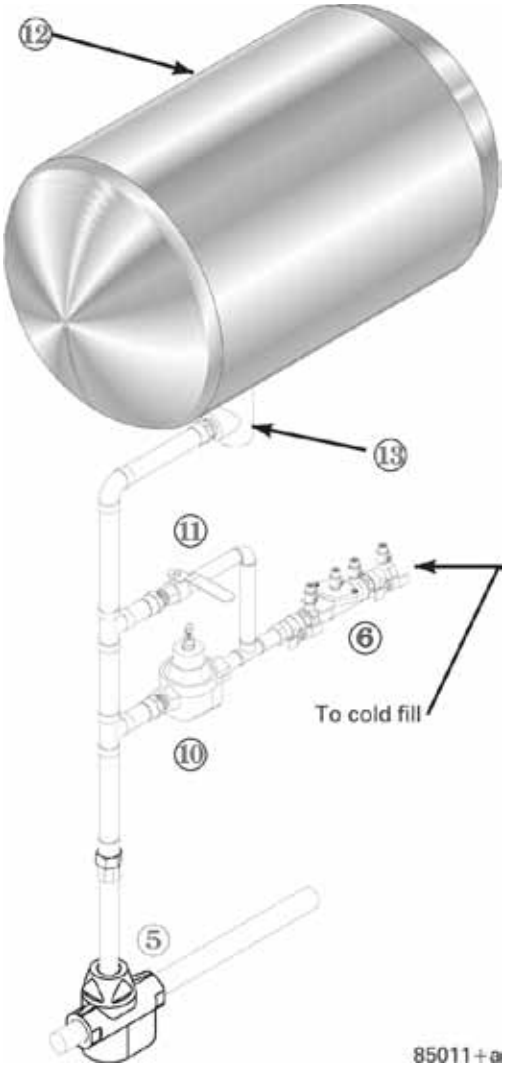

NOTICE Pipe diaphragm- or bladder-type expansion tanks to the bottom of the separator.

NOTICE Pipe closed-type (air in contact with water) tanks to the top of the air separator. Always connect the fill line to the expansion tank location, as shown above and in the suggested piping.

Legend

1 Relief valve discharge piping — see page 12
2 Isolation valves
3 Fill valve
4 Diaphragm-type expansion tank — always locate as shown in the suggested piping drawings in this manual
5 Air separator
- provide with automatic air vent ONLY when used with diaphragm-type expansion tanks
- pipe air outlet to expansion tank when used with close-type tanks

6 Cold fill line, with backflow preventer or check valve when required by codes (see Figure 15 for typical components)
7 System supply piping
8 System return piping
10 Pressure reducing valve, when used
11 Quick-fill bypass valve, when used
12 Closed-type expansion tank — always locate as shown in the suggested piping drawings in this manual
13 Tank fitting

Install water piping *(continued)*

System water piping methods

NOTICE Most piping methods shown in this manual use primary/secondary connection to the boiler loop. These designs ensure proper flow through the GWC boiler, for the most efficient and reliable operation of the boiler and the heating system. For other piping methods, consult your local Williamson-Thermoflo representative.

Circulators

⚠WARNING Do not remove either of the GWC internal pumps for use elsewhere in the system. Both pumps are required for proper operation. Removing a pump will cause the boiler to malfunction. Substantial property damage could result.

Never install another pump in series with the GWC boiler. Forced flow can cause improper operation of the boiler controls. Substantial property damage could result.

Failure to comply could result in unreliable performance and nuisance shutdowns from insufficient flow.

Circulator flow rate

Size system circulators based on the flow rate required to achieve the temperature change needed. You can closely estimate temperature rise (or drop) through a circuit by using the following formula, where TD is temperature rise (or drop), FLOW is flow rate (in gpm), and BTUH is the heat load for the circuit:

$$\text{FLOW} = \frac{\text{BTUH}}{\text{TD} \times 500}$$

Examples:

Consider a system loop for a system with total heating load equal to 210,000 Btuh. The desired temperature drop through the system piping is 20°F. Then the required flow rate is:

$$\text{FLOW} = \frac{210{,}000}{20 \times 500} = 21 \text{ gpm}$$

SIMPLIFIED: For 20° temperature drop, FLOW = MBH / 10.

Circulator head requirement

The circulator must be capable of delivering the required flow against the head loss that will occur in the piping. Determine the pipe size needed and the resultant head loss using accepted engineering methods. The simplified pipe sizing here is limited to residential systems, and does not include systems with fan coil units or radiant tubing.

⚠CAUTION The following simplified method for pipe and circulator sizing must be limited to residential applications using baseboard (finned or cast iron), cast iron radiators or convectors. DO NOT apply for radiant heating, fan coil units or commercial installations.

Simplified pipe/circulator selection

1. Install the boiler and piping using the recommended piping layouts in this manual.
2. Size the piping and components for each circuit in the space heating system using Figure 16. **At the flow rates listed, the head loss in all piping will be 0.04 feet per foot of pipe.**
   a. Determine the heating load (Btuh) for each circuit.
   b. Calculate the flow rate for each circuit using its load.
   To use a 20°F temperature drop, just divide the MBH (1,000's of Btuh) by 10.
   Example — Flow for 20°F temp drop with 35,000 Btuh:
   FLOW = 35 MBH / 10 = 3.5 gpm
   c. Find the pipe size in Figure 16 that has a max flow rate just larger than that required for the circuit.
   d. Find the total equivalent length (TEL) of the circuit.
   TEL accounts for losses through fittings and valves by using the equivalent length of pipe that would cause the same head loss. Add these numbers to the measured length of the circuit to find TEL in feet.
   TEL is usually close to 1.5 times the length of the circuit for residential baseboard, radiator or convector applications.
   e. Measure the length of each circuit from the circulator outlet back to its inlet. Then multiply this length times 1.5 to get the approximate TEL of the circuit.
   f. Find the head loss for each circuit:
   TEL = 1.5 X Circuit Length *(feet)*
   HEAD = TEL X 0.04 *(feet water column)*
   g. NOTE: Size system header piping for the total flow of all connected zones.
3. Example:
   a. For a circuit with heating load = 45,000 Btuh (= 45 MBH). Measured length of circuit is 88 feet.
   b. Flow = 45 MBH / 10 = 4.5 gpm.
   c. TEL = 1.5 x 88 feet = 132 feet.
   d. From Figure 16, select 1" pipe (max flow = 8 gpm).
   e. Head loss = TEL x 0.04 = 132 x 0.04 = 5.28 feet.
   f. Select a circuit that can deliver at least 4.5 gpm at a head of 5.28 feet. (Read the NOTICE below.)

NOTICE To use this method, limit the flow through ¾" finned-tube baseboard to 3.9 gpm, or use 1" baseboard and limit flow to 7.1 gpm. If the total load of the circuit requires more flow, split the circuit into two or more.

Figure 16 Flow rates for ***0.04 feet head loss per foot*** of copper pipe *(based on water at140°F)*

Pipe size (inches)	MAX Flow rate (GPM) @ 0.04 feet per foot	Pipe size (inches)	MAX Flow rate (GPM) @ 0.04 feet per foot
¾	4	**2**	45
1	8	**2½**	75
1¼	14	**3**	140
1½	22	**4**	290

Install water piping *(continued)*

Baseboard system piping — CIRCULATOR zoning (primary/secondary)

Apply Figure 17 for circulator zoning on systems using baseboard heaters. The heaters can be any baseboard style, including finned tube or cast iron.

NOTICE **Zoning with circulators** — The GWC internal system circulator cannot be removed from the boiler for use as one of the zone circulators. It must remain as shipped from the factory to allow proper flow control inside the boiler. You will need a circulator for each zone. Provide circulator relays or circulator zone controller.

Baseboard system piping — ZONE VALVE zoning (direct connection)

The boiler internal circulator can be used to circulate many zone-valve zoned systems as shown in Figure 18, page 17 for application on systems using baseboard (finned tube or cast iron).

- **DO NOT apply this piping when using a GWC-175 — the internal circulator cannot supply enough flow to the system**.
- **When applying Figure 18, page 17, DO NOT exceed the limits shown in Figure 19, page 17**.
- **For systems requiring higher flow or head loss, apply the suggested piping of Figure 20, page 18, NOT that of Figure 18, page 17.**

NOTICE **Balancing, when required** — Substitute a memory-stop valve for one of the isolation valves in each zone to use the memory-stop valve for balancing flow as well as isolation.

NOTICE **Zoning with zone valves** — Provide a separate 24-volt transformer to power the zone valves. Size the transformer to handle the total rated load of all connected zone valves. Alternatively, use a zone valve zone controller.

Applying Figure 18, page 17

1. Figure 18, page 17 and Figure 19, page 17 provide guidelines for checking whether the GWC internal circulator can provide sufficient flow when directly connected to a two-pipe baseboard system.

NOTICE The outputs of GWC boilers are all too high for connection to a single-loop series-loop system. To apply to an existing series loop system, the system must be fitted with trunk lines to convert to a split-loop system. Provide either one or two trunk lines to meet the minimum number of circuits and maximum loading per circuit given in Figure 19, page 17.

2. The system pipe sizing must be no smaller than shown in the Legend for Figure 18, page 17.
3. Values shown for maximum circuit lengths, maximum load per circuit and the maximum feet baseboard per circuit are limits that ensure the internal circulator will have sufficient head to provide the flow needed for each circuit.

Figure 17 Baseboard system — circulator zoning

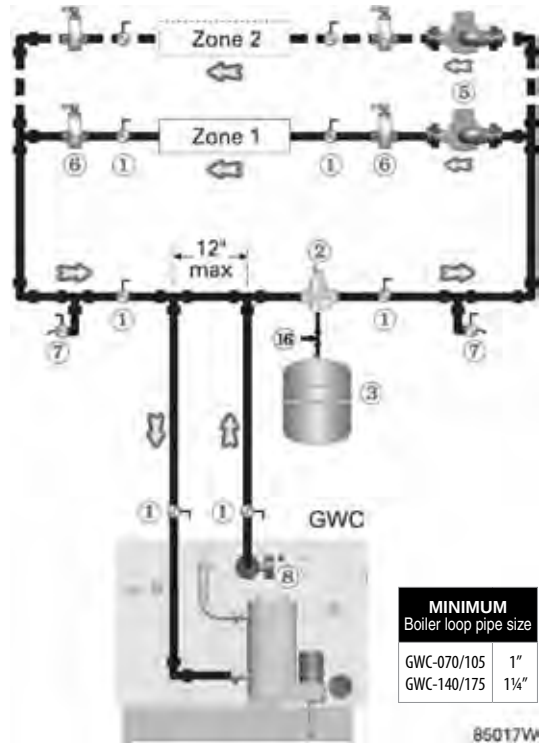

MINIMUM Boiler loop pipe size	
GWC-070/105	1"
GWC-140/175	1¼"

Legend

1 Isolation valves

2 Automatic air vent (with diaphragm-type expansion tank), or connect to tank fitting (closed-type expansion tank).

3 Diaphragm- or bladder-type expansion tank, if used. (For closed-type expansion tank, pipe from top of air separator to tank fitting as in Figure 15, page 14.)

5 Zone circulator

6 Flow/check valve

7 Hose bibb purge valve

8 Boiler pressure/temperature gauge

16 Cold water fill line — see Figure 15, page 14 for typical components

Install water piping *(continued)*

Figure 18 Zone valve zoning — GWC-070, GWC-105 or GWC-140 (DO NOT apply to GWC-175)

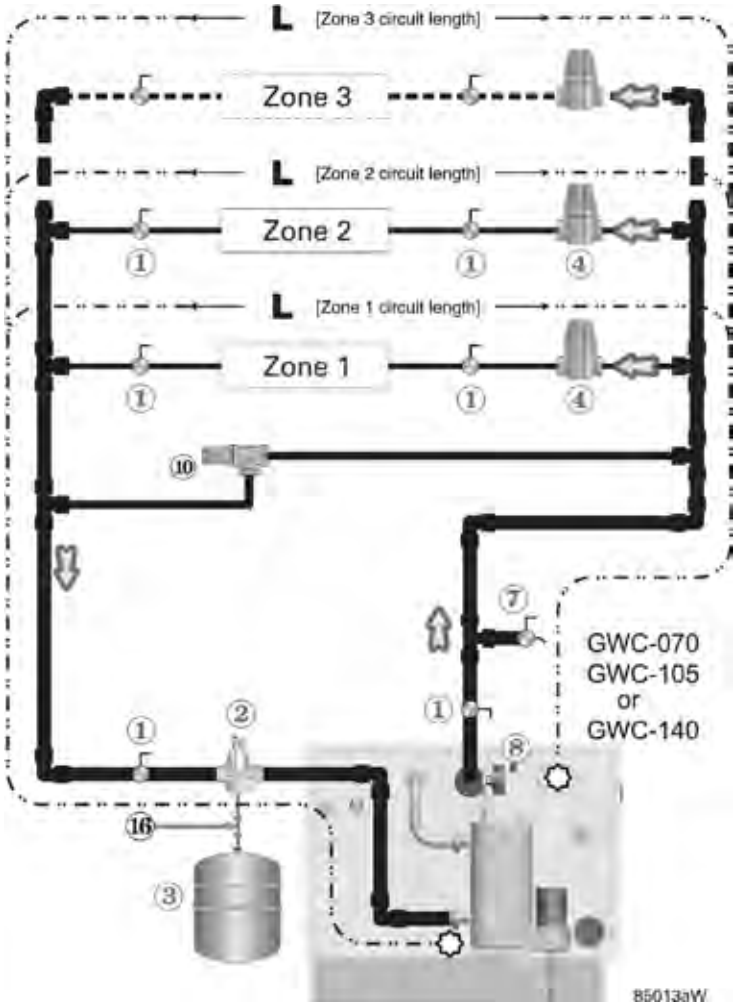

Legend

1 Isolation valves
2 Automatic air vent (with diaphragm-type expansion tank), or connect to tank fitting (closed-type expansion tank).
3 Diaphragm- or bladder-type expansion tank, if used. (For closed-type expansion tank, pipe from top of air separator to tank fitting as in Figure 15, page 14.)
4 Zone valve
7 Hose bibb purge valve
8 Boiler pressure/temperature gauge
10 Differential pressure bypass valve
16 Cold water fill line — see Figure 15, page 14 for typical components

Pipe sizes (NPT), minimum

Boiler model	Mains ▬	Circuits —
GWC-070 GWC-105	1"	¾"
GWC-140	1¼"	¾"

Circuit requirements

See Figure 19

NOTICE **One-pipe diverter tees systems** — The application information on this page is based on two-pipe baseboard systems. To check whether the internal circulator can provide sufficient flow to a one-pipe diverter tee system, use the available head value given in Figure 19, page 17.

Figure 19 The system must meet the following requirements when applying Figure 18

Boiler model	Circulator HEAD available to the system	Maximum circuit length L	Minimum number of circuits	Max load of any circuit	Max feet baseboard of any circuit (@ 600 Btuh/foot)	Summary
GWC-070	6.4 feet w.c. @ 6.5 GPM	103 feet	2	40 MBH	67 feet	6.5 GPM total (max 4GPM any cricuit) 20°F temperature drop
GWC-105	4.1 feet w.c. @ 9.7 GPM	92 feet	3	33 MBH	55 feet	9.7 GPM total (max 3.3 GPM any circuit) 20°F temperature drop
GWC-140 *	5.5 feet w.c. @8.7 GPM	112 feet	3	53 MBH	88 feet	8.7 GPM (max 3.5 GPM any circuit) 30°F temperature drop
GWC-175	DO NOT apply to GWC-175 — Use primary/secondary piping ONLY, as in Figure 20, page 18.					

* This application may be marginal. It could cause temperature distribution problems, because the temperature drop is 30°F, NOT 20°F. The best method is to use primary/secondary piping for the GWC-140 as in Figure 20, page 18.

Install water piping *(continued)*

Radiator system piping

Apply Figure 20 (zone-valve zoning) or Figure 21 (circulator zoning) to systems using standing cast iron radiators. This applies to gravity water systems and converted steam systems using columnar, tubular or recessed cast iron radiators.

The suggested piping for zone-valve zoning radiator systems differs from baseboard systems because of the high water content of cast iron radiators. The GWC internal circulators automatically regulate supply and internal bypass flow based on the temperature of the water returning to the boiler. At the start of many heating cycles in a radiator system, the water in the radiators is cool. So the boiler would slow down system flow rate while sending out relatively hot water. This could cause heat distribution problems. Install a separate system circulator as shown in Figure 20 when zoning with zone valves. The separate circulator assures a relatively constant temperature drop through the system.

The boiler internal circulators must be left in the boiler. They cannot be removed for use a zoning circulator. Provide a circulator for each zone when circulator zoning, and pipe the system as in Figure 21.

NOTICE **Balancing, when required** — Substitute a memory-stop valve for one of the isolation valves in each zone to use the memory-stop valve for balancing flow as well as isolation.

NOTICE **Zoning with zone valves** — Provide a separate 24-volt transformer to power the zone valves. Size the transformer to handle the total rated load of all connected zone valves. Alternatively, use a zone valve zone controller.

NOTICE **Zoning with circulators** — The GWC internal system circulator cannot be removed from the boiler for use as one of the zone circulators. It must remain as shipped from the factory to allow proper flow control inside the boiler. You will need a circulator for each zone. Provide circulator relays or circulator zone controller.

NOTICE **The system circulator must be supplied by the installer.**

Legend

1 Isolation valves
2 Automatic air vent (with diaphragm-type expansion tank), or connect to tank fitting (closed-type expansion tank).
3 Diaphragm- or bladder-type expansion tank, if used. (For closed-type expansion tank, pipe from top of air separator to tank fitting as in Figure 15, page 14.)
4 Zone valve
5 System or zone circulator
6 Flow/check valve
7 Hose bibb purge valve
8 Boiler pressure/temperature gauge
9 System supply temperature gauge
10 Differential pressure by-pass valve
16 Cold water fill line — see Figure 15, page 14 for typical components

Figure 20 Radiator system — zone-valve zoning

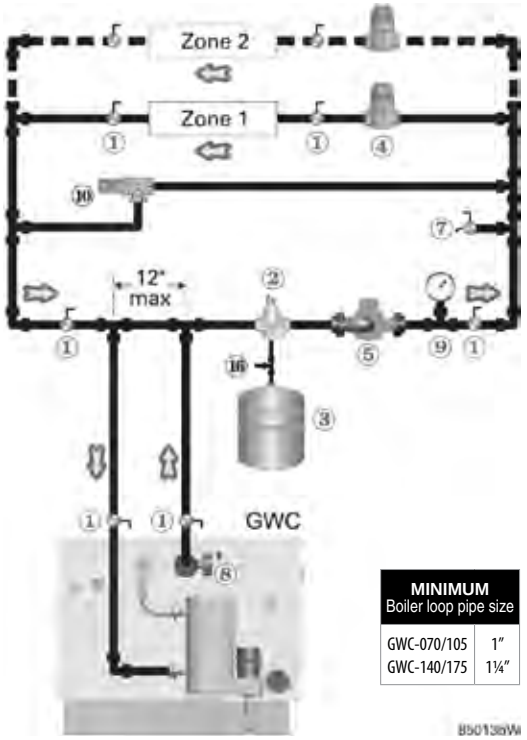

Figure 21 Radiator system — circulator zoning

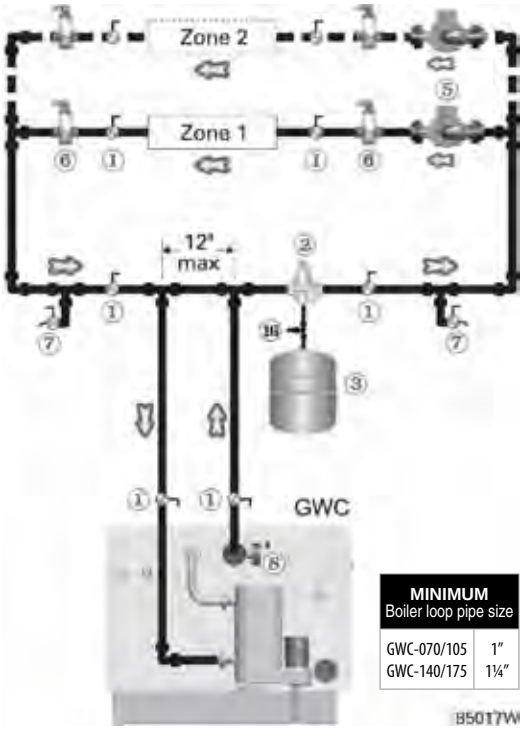

Install water piping *(continued)*

Single-zone radiant heating or heat pump

Radiant heating systems and heat pump systems usually require system supply water temperatures below 140°F. But the boiler outlet water temperature will be at least 150°F to 160°F during most operating conditions. So the piping must include a method of reducing the supply water temperature to the system.

Figure 22 uses two balancing valves to manually adjust the supply water temperature. Follow the instructions below to adjust these valves. Install the supply temperature limit control (item **14**) as shown to protect the system from over-temperature conditions. Note also that this piping requires a separate system circulator, as shown, because of the higher flow rates of radiant and heat pump systems.

Manual adjustment of the supply temperature is limited to single-zone systems because multi-zone systems will cause varying loads, making it unlikely an acceptable valve setting could be found. See Figure 23, page 20 or Figure 24, page 20 for multi-zone systems.

You may also apply the suggested piping of either Figure 23, page 20 or Figure 24, page 20 if you want automatic supply temperature regulation or outdoor reset temperature control.

For additional information and alternatives in piping for radiant heating systems, contact Williamson-Thermoflo.

NOTICE **The system circulator must be supplied by the installer.**

Adjust balancing valves

Use valves **17** and **18** to mix boiler supply water with system return water, reducing supply water temperature to the system.

1. Subtract the design system supply temperature from 150°F. Call this number the **temperature difference**.
2. Open valve **17** and close valve **18**.
3. Start the boiler and system.
4. Let the system warm up for about 15 minutes.
5. Note the temperature at gauge **9** (system supply) and gauge **8** (boiler supply).
6. Slowly close valve **17** while opening valve **18** until gauge **9** reads **lower** than gauge **8** by at least the **temperature difference** found in step 1.
7. Example: For a design supply temperature of 100°F, the **temperature difference** would be 150°F minus 100°F, or 50°F. Set the valves until gauge **9** reads at least 50°F lower than gauge **8**.

Figure 22 Single-zone radiant heating or heat pump system

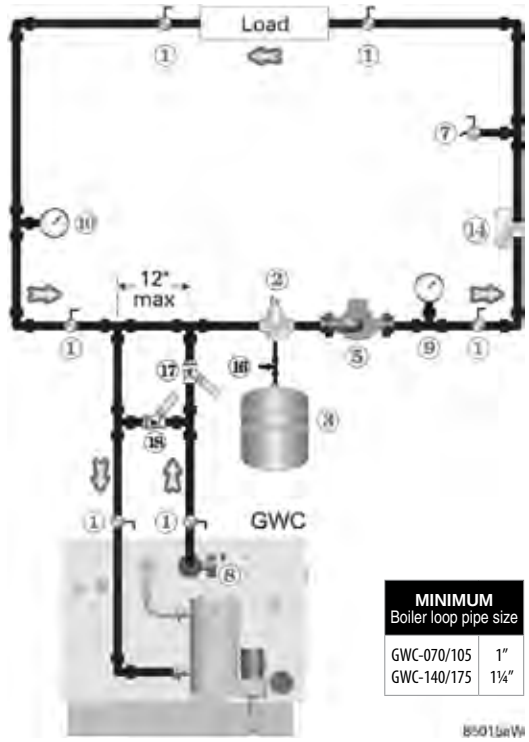

Legend

1	Isolation valves
2	Automatic air vent (with diaphragm-type expansion tank), or connect to tank fitting (closed-type expansion tank).
3	Diaphragm- or bladder-type expansion tank, if used (For closed-type expansion tank, pipe from top of air separator to tank fitting as in Figure 15, page 14.)
5	System circulator
7	Hose bibb purge valve
8	Boiler pressure/temperature gauge
9	System supply temperature gauge
10	Return temperature gauge
14	Supply temperature limit control — Set at a temperature below the maximum allowed for the system or as directed by the system designer.
16	Cold water fill line — see Figure 15, page 14 for typical components
17	Balancing valve
18	Balancing valve

Install water piping *(continued)*

Multi-zone radiant heating system

Multi-zone systems require automatic regulation of the system supply temperature because of widely varying load conditions. Figure 23 (zone-valve zoning) and Figure 24 (circulator zoning) show suggested piping for these systems.

WARNING Provide an automatic temperature control valve or motor-operated valve which can be adjusted for the desired supply water temperature. This is required to protect the radiant system from excessive temperature.

Zone-valve zoning — The suggested piping uses a separate circulator for system circulation to provide the higher flow typical of radiant heating systems and to assure good temperature distribution in the system when the return water temperature is low.

Circulator zoning — The GWC internal circulators must not be removed. Provide a separate circulator for each zone.

NOTICE **Balancing, when required** — Substitute a memory-stop valve for one of the isolation valves in each zone to use the memory-stop valve for balancing flow as well as isolation.

NOTICE **Zoning with zone valves** — Provide a separate 24-volt transformer to power the zone valves. Size the transformer to handle the total rated load of all connected zone valves. Alternatively, use a zone valve zone controller.

NOTICE **Zoning with circulators** — The GWC internal system circulator cannot be removed from the boiler for use as one of the zone circulators. It must remain as shipped from the factory to allow proper flow control inside the boiler. You will need a circulator for each zone. Provide circulator relays or circulator zone controller. **The system circulator must be supplied by the installer.**

Outdoor reset

Apply Figure 23 or Figure 24 for any system intended for outdoor reset of the supply water temperature. Use a motor-operated three-way valve and an outdoor reset temperature control system.

Legend

1 Isolation valves
2 Automatic air vent (with diaphragm-type expansion tank), or connect to tank fitting (closed-type expansion tank).
3 Diaphragm- or bladder-type expansion tank, if used (For closed-type expansion tank, pipe from top of air separator to tank fitting as in Figure 15, page 14.)
4 Zone valve
5 System or zone circulator
6 Flow/check valve
7 Hose bibb purge valve
8 Boiler pressure/temperature gauge
9 System supply temperature gauge
10 Supply temperature automatic mixing valve
11 Differential pressure by-pass valve
16 Cold water fill line — see Figure 15, page 14 for typical components

Figure 23 Auto system supply temp regulation — zone valve zoning

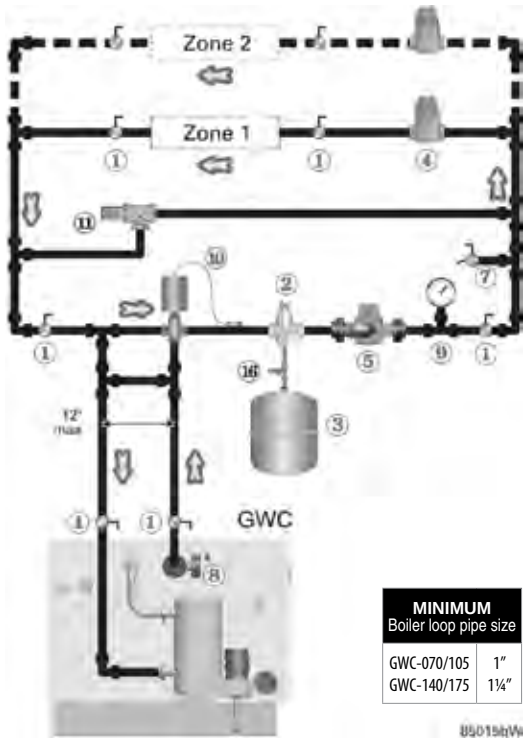

Figure 24 Auto system supply temp regulation — circulator zoning

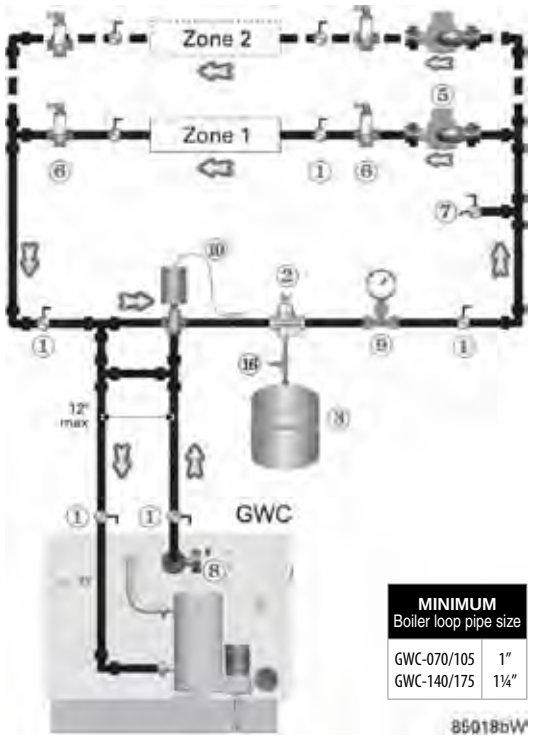

Install water piping *(continued)*

Piping snow melt systems or combination snow melt/space heating systems

Combination snow melt/space heating systems can have return water temperature below 60°F, and the return temperature will fluctuate. So these systems require automatic return water temperature as shown in Figure 25 (zone-valve zoning) or Figure 26 (circulator zoning).

Select an automatic temperature control valve or motor-operated valve which can be adjusted to provide a return water temperature of at least 60°F. Any setting higher than 60°F will also be acceptable.

Zone-valve zoning — The suggested piping uses a separate circulator for system circulation to assure good temperature distribution in the system when the return water temperature is low.

Circulator zoning — The GWC internal circulators must not be removed. Provide a separate circulator for each zone.

⚠WARNING The return water temperature to the boiler must be at least 60°F. Provide and apply means to regulate the return temperature. Failure to do so can result in boiler control operation problems, causing possible significant property damage.

NOTICE **Zoning with zone valves** — Each zone in the piping diagrams in this section is shown with an isolation valve on each side. Substitute a memory-stop valve for one of these in each zone in order to use the memory-stop valve for balancing flow as well as isolation.

Provide a separate 24-volt transformer to power the zone valves. Size the transformer to handle the total rated load of all connected zone valves.

NOTICE **Zoning with circulators** — The GWC internal system circulator cannot be removed from the boiler for use as one of the zone circulators. It must remain as shipped from the factory to allow proper flow control inside the boiler. You will need a circulator for each zone. Provide circulator relays or circulator zone controller. **The system circulator must be supplied by the installer.**

Legend	
1	Isolation valves
2	Automatic air vent (with diaphragm-type expansion tank), or connect to tank fitting (closed-type expansion tank).
3	Diaphragm- or bladder-type expansion tank, if used (For closed-type expansion tank, pipe from top of air separator to tank fitting as in Figure 15, page 14.)
4	Zone valve
5	System or zone circulator
6	Flow/check valve
7	Hose bibb purge valve
8	Boiler pressure/temperature gauge
9	System supply temperature gauge
10	Return temperature automatic mixing valve
11	Differential pressure by-pass valve
16	Cold water fill line — see Figure 15, page 14 for typical components

Figure 25 Auto return temp regulation — circulator zoning

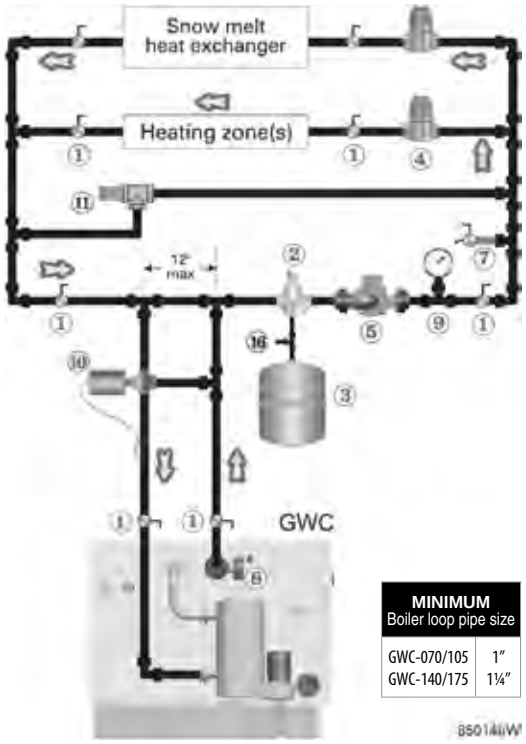

Figure 26 Auto return temp regulation — zone valve zoning

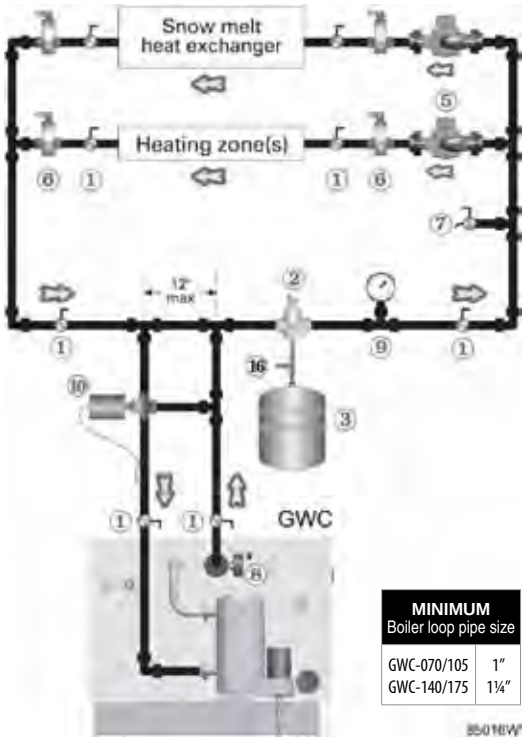

Install water piping *(continued)*

Water chiller systems

Pipe the boiler and water chiller as shown in Figure 27.

Install boiler, as shown, so chilled medium is piped in parallel with heating boiler.

Use appropriate valves to prevent chilled medium from entering boiler. See Figure 27 for typical installation of balancing valve and check valve.

Install the flow/check valve in the boiler supply piping, as shown in Figure 27, to prevent gravity circulation during the cooling cycle.

If boiler is connected to heating coils located in air handling units where they can be exposed to refrigerated air, use flow control valves or other automatic means to prevent gravity circulation during cooling cycle.

NOTICE **Balancing, when required** — Substitute a memory-stop valve for one of the isolation valves in each zone to use the memory-stop valve for balancing flow as well as isolation.

NOTICE **Zoning with zone valves** — Provide a separate 24-volt transformer to power the zone valves. Size the transformer to handle the total rated load of all connected zone valves. Alternatively, use a zone valve zone controller.

NOTICE **Zoning with circulators** — The GWC internal system circulator cannot be removed from the boiler for use as one of the zone circulators. It must remain as shipped from the factory to allow proper flow control inside the boiler. You will need a circulator for each zone. Provide circulator relays or circulator zone controller.

WARNING Chilled water systems often use closed-type expansion tanks, as shown in Figure 27. DO NOT install automatic air vents on these systems.

Figure 27 Installing GWC boiler in system with water chiller

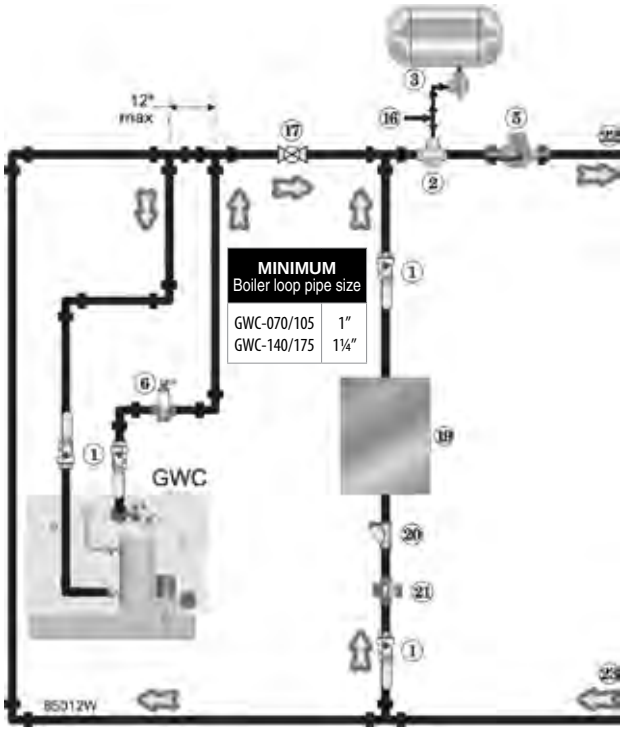

Legend	
1	Isolation valves
2	Air separator
3	Expansion tank with tank fitting (piping shown for application of a closed-type expansion tank)
5	System circulator
6	Flow/check valve
8	Boiler pressure/temperature gauge
16	Cold water fill line — see Figure 15, page 14 for typical components
17	Balancing valve
19	Chiller
20	Strainer
21	Check valve
22	System supply
23	System return

Multiple boiler installations

Placing multiple boilers

1. Locate multiple boilers in boiler room according to:
   a. Figure 28 (side-to-side), or
   b. Figure 29 (back-to-back).
2. Provide the clearances indicated in the illustrations listed above to provide for access and servicing. If these recommended dimensions are not possible, provide at least the recommended service clearances given on page 6. Also follow local codes.
3. Construct boiler foundation if boiler room floor is uneven or if there is a danger of flooding. Size foundation to allow for clearance and spacing dimensions shown in the illustrations at right.
4. Chalkline boiler locations on foundation or boiler room floor.
5. Uncrate, assemble and mount boilers according to instructions in this manual.
6. Provide clearance for installation of venting, air piping, gas piping, expansion tank, primary circulator and other accessories.

Controlling multiple GWC boilers

1. Multiple GWC boilers can be controlled using any boiler control/sequencing system that provides an isolated contact for call for heat (connected to the boiler's T-T terminals).

Piping multiple GWC boilers

1. See suggested piping diagrams in this manual. Contact Williamson-Thermoflo for assistance for systems not covered.
2. Always pipe the boilers on a secondary loop in a primary/secondary circuit as shown in the examples in this manual.

Figure 28 Side-to-side mounting of multiple GWC boilers, showing RECOMMENDED clearances

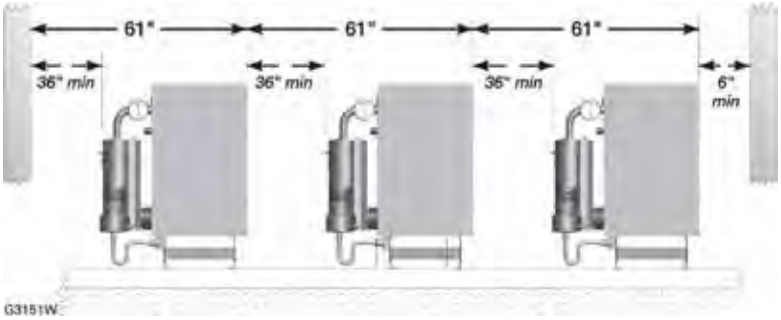

Figure 29 Back-to-back installation of multiple GWC boilers, showing RECOMMENDED clearances

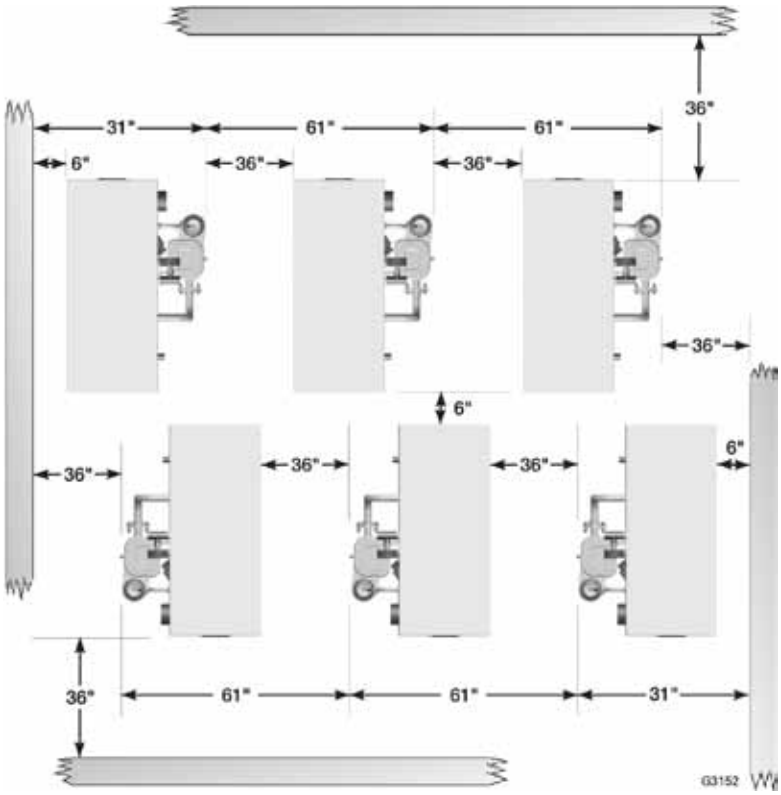

Multiple boiler water piping

Secondary header piping installation

1. Main header and secondary header pipe sizing.
   a. New system — See page 15.
   b. Replacing boilers in an existing system — Without reducing size, connect system supply and return lines. Install tees or crosses for secondary headers as shown in Figure 30 or Figure 31. Size headers to handle total connected boiler output as shown.
2. Provide connections in main header for secondary headers as close as possible to the midpoint of multiple boilers.
   a. Use tees for four or less boilers, as in Figure 30.
   b. Use either tees (Figure 30) or crosses (Figure 31) for five or more boilers.
3. Secondary header placement:
   a. To alternate spacing for supply and return lines to boilers, reverse the short-end and long-end of the headers as shown in Figure 30 and Figure 31.
   b. Return header must be on the return side of the main and supply header must be on the supply side of the main. Drawings in this manual show flow in system main from right to left. For system flowing left to right, reverse the locations of the manifolds accordingly.
4. Connect from secondary header branches to boiler supply and return connections using copper or steel pipe, sized for the required flow rate.
5. Provide a flow/check valve in the supply piping of each boiler as shown in piping diagrams in this manual. Install an isolation valve on the supply and return of each boiler as shown. Some local codes may require the use of individual water level controls and limits on each boiler when isolation valves are installed.
6. Install main system air eliminator and primary circulator in supply piping as shown in piping diagrams. Place expansion tank on suction side of system circulator as shown.
7. Install system accessories as shown in drawings.
8. Piping recommendation drawings:
   a. Figure 30 and Figure 31 show details of secondary headers.
   b. Figure 32, page 25 is a schematic piping drawing showing the locations of typical boiler piping and system piping, including limits and other devices often required by local codes.
   c. Figure 33, page 26 and Figure 34, page 27 are three-dimensional piping drawings of typical multiple boiler installation.
   d. Figure 35, page 28 shows recommended piping when an isolating heat exchanger is needed.
9. If desired, other primary/secondary piping arrangements can be used.

NOTICE When using isolation valves on each boiler, some codes may require providing a low water control and additional limit for each boiler. Consult local codes to determine if omission of the individual boiler isolation valves may allow the use of a single water level control and additional limit for the entire multiple boiler system.

Maximum connected load per header:

2-inch header — 450 MBH
3-inch header — 1400 MBH
4-inch header — 2900 MBH

Figure 30 Single-sided secondary header, typical

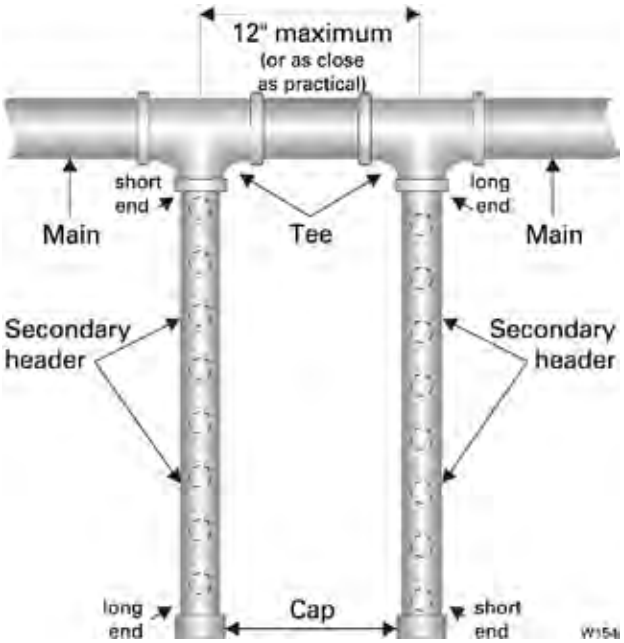

Figure 31 Double-sided secondary header, typical

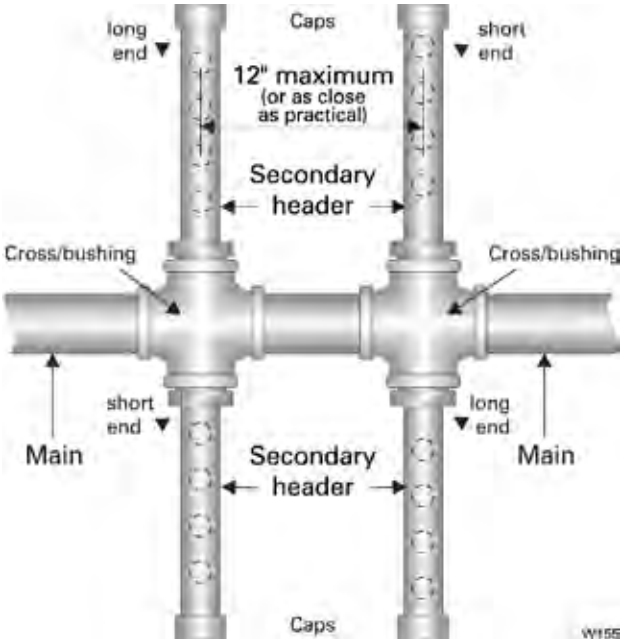

Multiple boiler water piping *(continued)*

Figure 32 Piping schematic — typical for multiple GWC boilers, using secondary headers

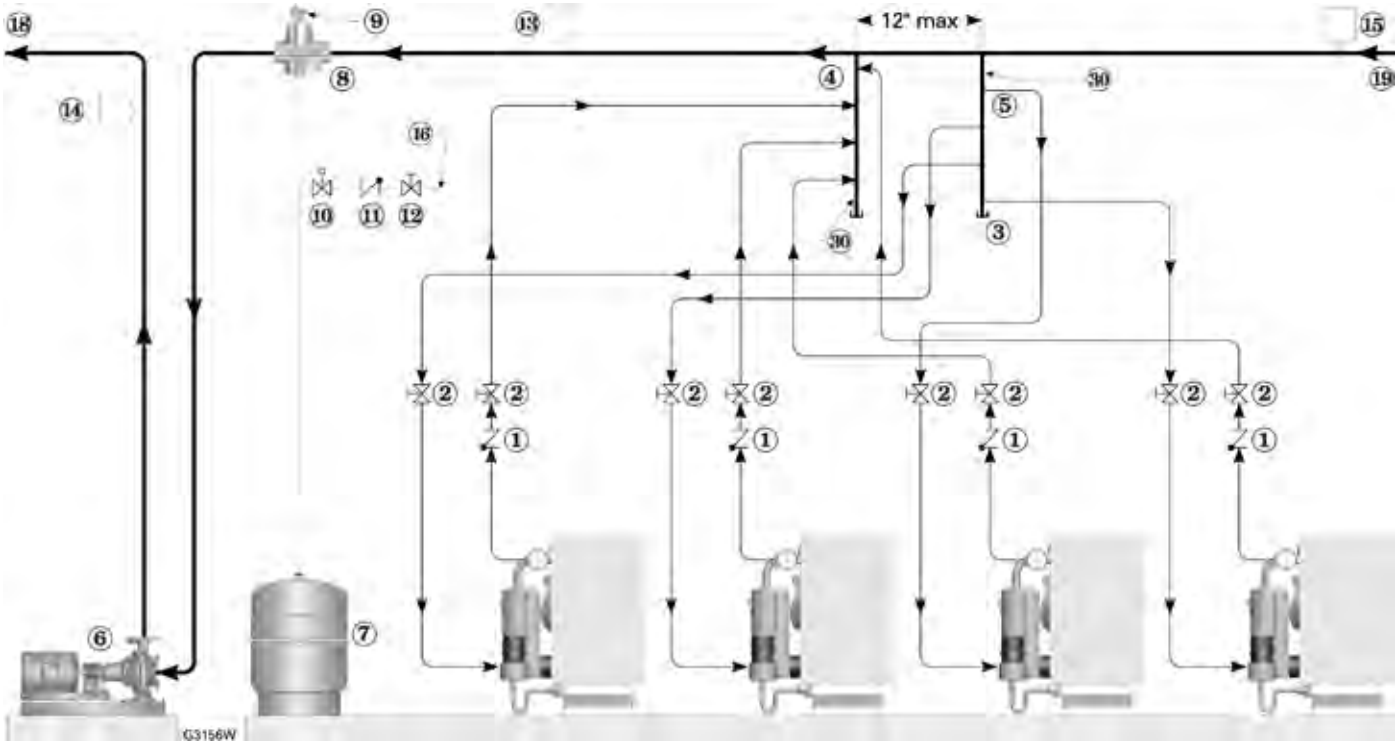

Legend — Figure 32	
1 Flow/check valve (each boiler)	11 Check valve or backflow preventer, as required by applicable codes
2 Isolation valves (when used)	12 Isolation valve
3 Cap	13 Water flow switch (when used)
4 Secondary header (supply) — layout and size per page 24	14 Supply water temperature control (when used)
5 Secondary header (return) — layout and size per page 24	15 Low water cutoff (when used) (place above primary header)
6 Primary circulator	16 Cold water fill line — see Figure 15, page 14 for typical components
7 Expansion tank (diaphragm type)	18 System supply
8 System air eliminator	19 System return
9 System automatic air vent	20 (Not shown) Boiler relief valve and discharge piping, installed per GWC Boiler Manual
10 Pressure reducing valve	30 Long end of secondary header

Multiple boiler water piping *(continued)*

Figure 33 Piping layout — typical for multiple GWC boilers, using secondary headers (2-boiler system)

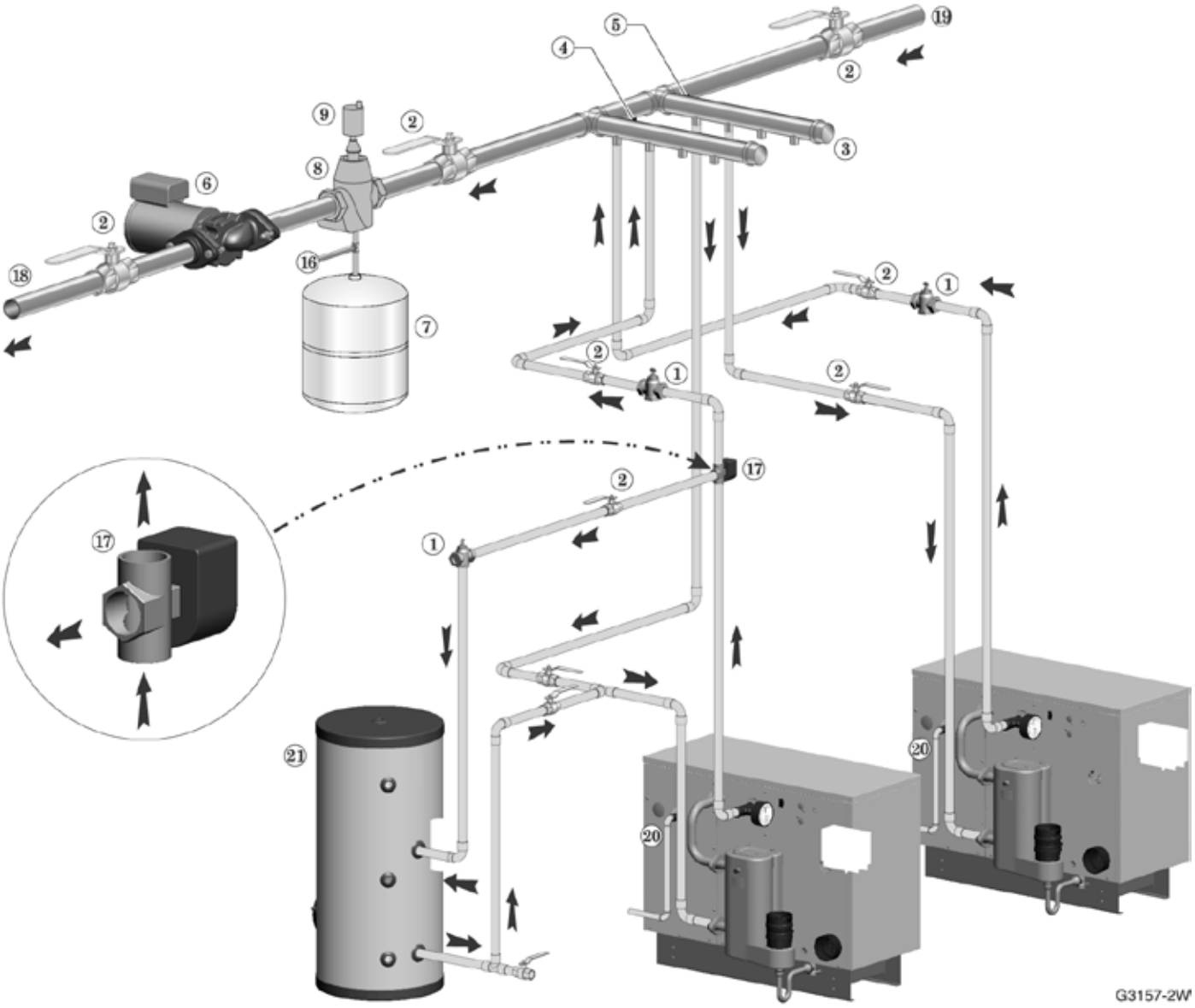

Legend — Figure 33	
1 Flow/check valve (each boiler)	17 3-way diverting valve (operated by DHW aquastat — valve end switch connects across boiler thermostat terminals)
2 Isolation valves (when used)	18 System supply
3 Caps	19 System return
4 Secondary header (supply) — layout and size per page 24	20 Boiler relief valve and discharge piping, installed per GWC Boiler Manual
5 Secondary header (return) — layout and size per page 24	21 Indirect-fired storage water heaters — Example is shown connected to one boiler of the system. The indirect water heater could also be connected with a secondary connection off the main header, as in Figure 34, page 27.
6 Primary circulator	
7 Expansion tank (diaphragm type)	
8 System air eliminator	
9 System automatic air vent	
16 Cold water fill line — see Figure 32, page 25 for typical components	

Multiple boiler water piping *(continued)*

Figure 34 Piping layout — typical for multiple GWC boilers, with DHW storage heaters (4-boiler system)

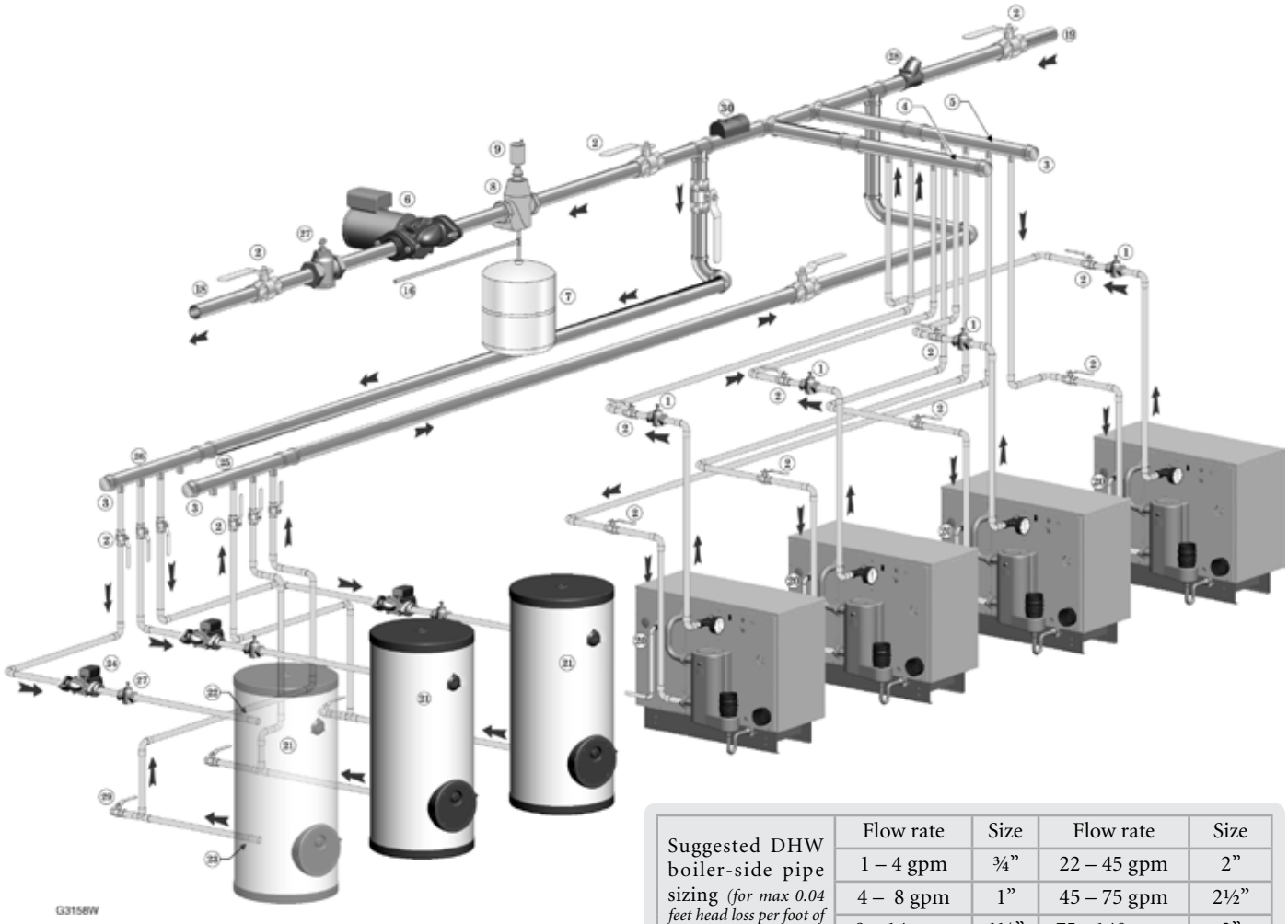

Suggested DHW boiler-side pipe sizing *(for max 0.04 feet head loss per foot of total equivalent length, TEL)*	Flow rate	Size	Flow rate	Size
	1 – 4 gpm	¾”	22 – 45 gpm	2”
	4 – 8 gpm	1”	45 – 75 gpm	2½”
	8 – 14 gpm	1¼”	75 - 140 gpm	3”
	14 – 22 gpm	1½”	140 – 290 gpm	4”

Legend — Figure 34

1 Flow/check valve (each boiler)
2 Isolation valves (when used)
3 Caps
4 Secondary header (supply) — layout and size per page 24
5 Secondary header (return) — layout and size per page 24
6 Primary circulator
7 Expansion tank (diaphragm type)
8 System air eliminator
9 System automatic air vent
16 Cold water fill line — see Figure 32, page 25 for typical components
18 System supply
19 System return
20 Boiler relief valve and discharge piping, installed per GWC Boiler Manual
21 Indirect-fired storage water heaters — Example is shown with a boiler water circulator on each water heater. Alternatively, the water heaters could be connected with reverse return piping, using a common circulator.
22 Boiler water inlet
23 Boiler water outlet
24 DHW boiler-side circulators
25 DHW boiler-side return secondary header
26 DHW boiler-side supply secondary header
27 Flow/check valves (to prevent induced or gravity flow in heating system or DHW piping)
28 Check valve to prevent heat migration in heating system
29 Drain valves
30 Sensor for BCP (boiler control panel), when used

Note: See water heater manual for DHW piping — The DHW piping must also be manifolded together since the boiler-side piping is manifolded. If DHW heaters supply separate DHW circuits, provide an individual circulator for each water heater, and control each circulator by its water heater’s aquastat.

NOTICE This piping is suggested only. The layout above should be controlled with a boiler sequencing panel that provides DHW operation as well. Wire the heating system circulator to operate only on call for heat. Alternatively, use the boiler sequencing panel to provide domestic priority by disabling the heating system circulator any time there is a DHW call for heat. The boiler internal circulators operate on any call for heat, whether heating system or DHW. Offset the DHW boiler-side supply and return manifolds as shown so the total run of pipe and fittings to each of the water heaters is approximately equal.

Multiple boiler water piping *(continued)*

Figure 35 Piping layout — typical for multiple GWC boilers, using isolation exchanger

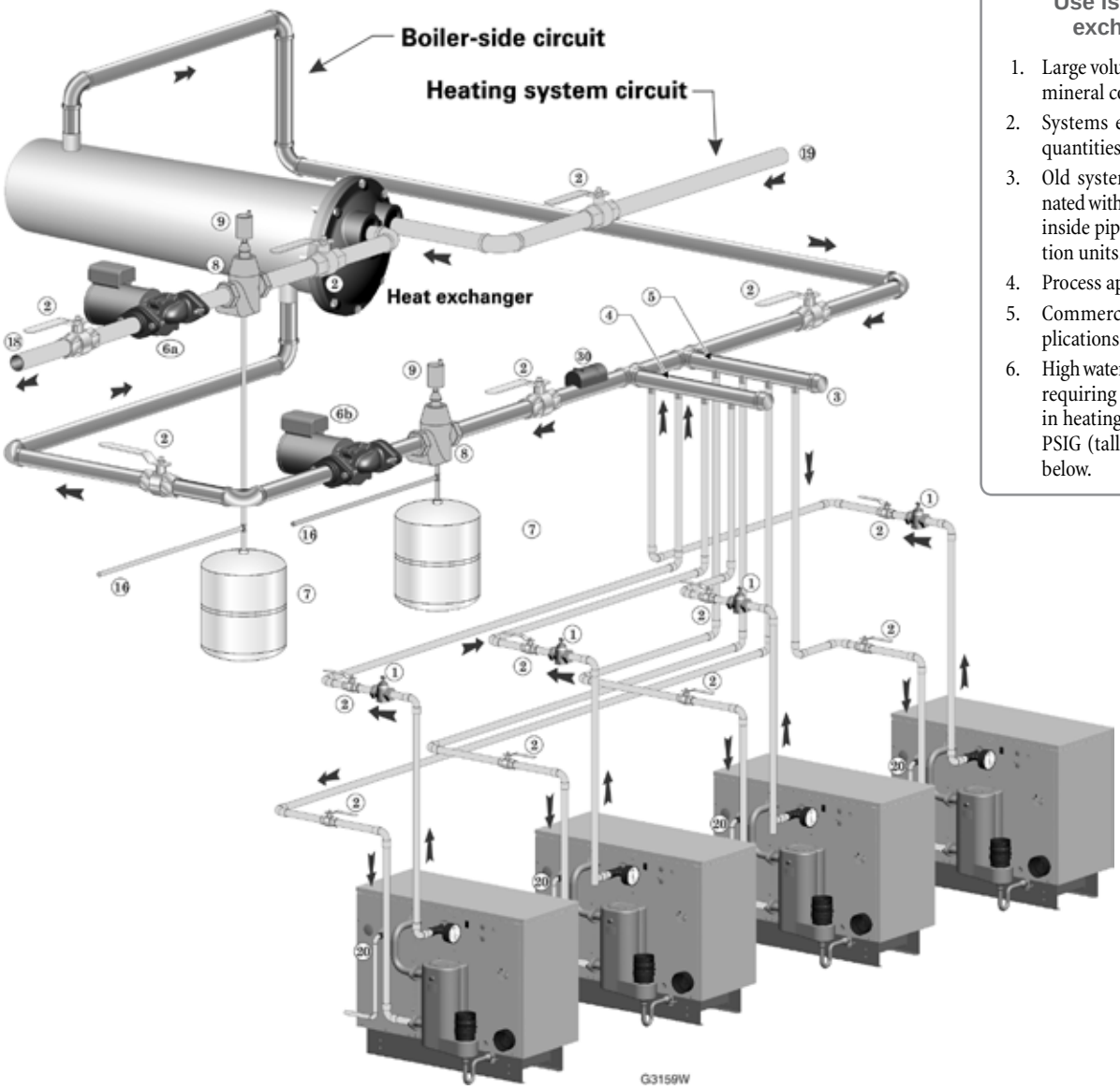

Use isolation heat exchanger for:

1. Large volume systems with high mineral content in water.
2. Systems exposed to untreated quantities of makeup water.
3. Old systems severely contaminated with scale and rust buildup inside piping and heat distribution units.
4. Process applications.
5. Commercial service water applications.
6. High water pressure applications, requiring pressure relief setting in heating system more than 50 PSIG (tall buildings). See notes below.

Legend — Figure 35

1 Flow/check valve (each boiler)	9 System automatic air vent	Notes:
2 Isolation valves (when used)	13 Cold water supply connections	1. Contact heat exchanger manufacturer for heat exchanger shell-side and tube-side piping and circulator requirements. Tube-side flow and temperatures must meet heating system requirements.
3 Cap	16 Cold water fill line — see Figure 32, page 25 for typical components	2. Contact heat exchanger manufacturer for sizing heat exchanger.
4 Secondary header (supply) — layout and size per page 24	18 Heating system supply	3. Heat exchanger shell-side circuit requires its own expansion tank as shown.
5 Secondary header (return) — layout and size per page 24	19 Heating system return	4. Heating system circuit requires its own expansion tank, as shown, plus its own relief valve set to protect heating system and heat exchanger piping and components.
6a Heating system circulator (exchanger tube-side)	20 Boiler relief valve and discharge piping, installed per GWC Boiler Manual	5. When individual isolation valves are used, individual boiler and level controls may be required.
6b Heat exchanger shell-side circulator	30 Sensor for BCP (boiler control panel), when used	
7 Expansion tanks (diaphragm type)		
8 System air eliminator		

Venting & air — general

DANGER **GWC boilers must be vented and supplied with combustion and ventilation air using piping and methods described in this manual.**

Every boiler must have its own vent. DO NOT common vent with any other appliance.

Inspect finished vent and air piping thoroughly to ensure all are airtight and comply with the instructions provided and with all requirements of applicable codes.

Failure to provide a properly-installed vent and air system will cause severe personal injury or death.

NOTICE If the vent/air piping configurations covered in the GWC boiler manual cannot be applied for a particular installation, contact Williamson-Thermoflo for assistance. Other configurations may be available.

WARNING **Where vent piping is routed through an unheated space**, apply minimum 1 inch of foil-faced fiberglass insulation on the length of the vent pipe in the unheated space.

WARNING Installations must comply with local requirements and with the National Fuel Gas Code, ANSI Z223.1 for U.S. installations or CSA B149.1 or B149.2 for Canadian installations.

WARNING Use only the materials listed in this manual for vent and air pipe and fittings. See Figure 40, page 33.

WARNING **If used, a masonry chimney can ONLY be used as a PIPE CHASE for vent and air pipes** — The vent and air piping must be installed as instructed in this manual and all joints must be sealed. The chimney must be used only for GWC boilers. NO OTHER appliance or fireplace can be connected to the chimney. The chimney must be straight, with no offsets, and the vent and air piping materials must comply with this instruction manual. The chimney must be fitted with a sealed access opening, through which the interior of the chimney can be inspected. The chimney (and liner, if installed) must be inspected at least once annually to verify condition.

Failure to comply could result in severe personal injury, death or substantial property damage.

When removing a boiler from an existing common vent system

The GWC boiler cannot be common vented with any other appliance. When an existing boiler is replaced with a GWC boiler, the GWC boiler CANNOT use the existing common vent. The GWC boiler requires its own vent and air piping, as specified in this manual. This may cause a problem for the appliances that remain on the old common vent, because the vent may be too large. The following test, required by ANSI Z21.13, is intended to check for proper operation of the appliances remaining on the old common vent system.

Vent system verification

At the time of removal of an existing boiler, the following steps shall be followed with each appliance remaining connected to the common venting system placed in operation, while the other appliances remaining connected to the common venting system are not in operation. Seal any unused openings in the common venting system.

Existing vent test procedure

(The following is intended to test whether the appliances remaining on an existing vent system will operate satisfactorily.)

1. Visually inspect the venting system for proper size and horizontal pitch and determine there is no blockage or restriction, leakage, corrosion or other deficiencies which could cause an unsafe condition.
2. Test vent system — Insofar as is practical, close all building doors and windows and all doors between the space in which the appliances remaining connected to the common venting system are located and other spaces of the building. Turn on clothes dryers and any appliance not connected to the common venting system. Turn on any exhaust fans, such as range hoods and bathroom exhausts, so they will operate at maximum speed. Do not operate a summer exhaust fan. Close fireplace dampers.
3. Place in operation the appliance being inspected. Follow the lighting instructions. Adjust thermostat so appliance will operate continuously.
4. Test for spillage at draft hood relief opening after 5 minutes of main burner operation. Use the flame of a match or candle, or smoke from a cigarette, cigar, or pipe.
5. After it has been determined that each appliance remaining connected to the common venting system properly vents when tested as outlined herein, return doors, windows, exhaust fans, fireplace dampers, and any other gas-burning appliance to their previous conditions of use.

Any improper operation of common venting system should be corrected so the installation conforms with the National Fuel Gas Code, ANSI Z223.1 — latest edition. Correct by re-sizing to approach the minimum size as determined using the appropriate tables in Part 11 of that code. Canadian installations must comply with B149.1 or B149.2 Installation Code.

Venting & air — general *(continued)*

Provide combustion air:

WARNING **DIRECT VENT — The installation must provide combustion air piping. In addition, ventilation openings may be required.**

DIRECT EXHAUST — The installation must provide combustion air openings to the boiler space.

ALL APPLICATIONS — The installation must provide combustion air openings as needed for other appliances in the space.

Vent and air termination options

1. Vent and air piping must terminate out the sidewall or through the roof of the building, using only one of the methods described in this manual. See Figure 39, page 32 and Figure 40, page 33 for allowable configurations and piping materials.

DIRECT VENT installations

1. For direct venting, combustion air must be piped from outside to the boiler, following the instructions in this manual, and compliant with all applicable codes.
2. Ventilation openings are required for some spaces. See Figure 42, page 36.
3. If other appliances are located in the same space with the GWC boiler, provide openings shown in Figure 42, page 36.

WARNING If combustion and ventilation air openings are not provided as directed above and the room does not have adequate ventilation, the higher temperature in the space may result in reduced component life.

DIRECT EXHAUST installations

1. Combustion and ventilation air must be provided in the boiler room on direct exhaust installations. Follow all instructions in this manual (see page 47 for air opening instructions) and all applicable codes to provide required air openings.

NOTICE **DO NOT sidewall vent DIRECT EXHAUST APPLICATIONS** at altitudes above 5,500 feet. Sidewall venting is only allowed for **DIRECT VENT** applications (ducted combustion air) at altitudes above 5,500 feet.

Combustion air contamination:

WARNING **Ensure that the combustion air will not contain any of the contaminants in Figure 36.**

DO NOT place combustion air supply openings or intake terminations near a swimming pool, for example.

Avoid areas subject to exhaust fumes from laundry facilities. These areas will always contain contaminants.

Figure 36 Corrosive contaminants and sources

Products to avoid
Spray cans containing chloro/fluorocarbons
Permanent wave solutions
Chlorinated waxes/cleaners
Chlorine-based swimming pool chemicals
Calcium chloride used for thawing
Sodium chloride used for water softening
Refrigerant leaks
Paint or varnish removers
Hydrochloric acid/muriatic acid
Cements and glues
Antistatic fabric softeners used in clothes dryers
Chlorine-type bleaches, detergents, and cleaning solvents found in household laundry rooms
Adhesives used to fasten building products and other similar products
Excessive dust and dirt
Areas likely to have contaminants
Dry cleaning/laundry areas and establishments
Swimming pools
Metal fabrication plants
Beauty shops
Refrigeration repair shops
Photo processing plants
Auto body shops
Plastic manufacturing plants
Furniture refinishing areas and establishments
New building construction

Venting & air — general *(continued)*

Manifolded combustion air option for DIRECT VENT multiple boiler installations

1. Multiple GWC boilers can use a common combustion air manifold.
   a. The combustion air inlet must be located in a sidewall (and the **vents must terminate on the same side of the building**).
   b. See below for minimum cross sectional area of combined air ducts.
   c. Provide minimum clearance to adjacent vents and grade/snow line as shown in Figure 37.
   d. Provide minimum free area in duct (adjusted for louver restriction) of **1 square inch per 2,000 Btuh** total boiler input.
   e. If combustion air damper is used, wire to boilers to prevent operation except after damper has opened.

WARNING ONLY air piping can be combined. **DO NOT use combined vent piping. All vent pipes must be routed and terminated individually** as described in this manual. Flue gas leakage and boiler component damage can occur. Failure to comply could result in severe personal injury, death or substantial property damage.

Air manifold sizing

1. See Figure 106, page 100 for minimum cross sectional area of combined air ducts.

OR

2. CALCULATE required cross section (for area in square inches):
   a. **MIN. AREA = TOTAL MBH INPUT DIVIDED BY 2**
3. Example:
   a. A multiple boiler system with (4) **GWC-140** boilers has a total input of 4 x 140 = **560** MBH (560,000 Btuh).
   b. The required duct cross sectional area is:
   c. **MIN. AREA = 560 DIVIDED BY 2**
      = 280 sq. inches

Figure 37 Combustion air manifold option (combined air inlet, but individual vents) — must comply with Figure 41, page 35

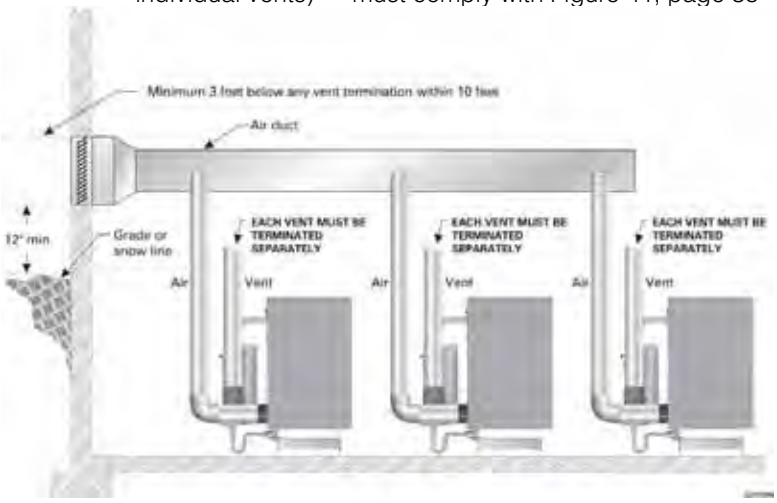

Figure 38 Maintain clearances and placement between the air manifold inlet and any appliance vent as shown below

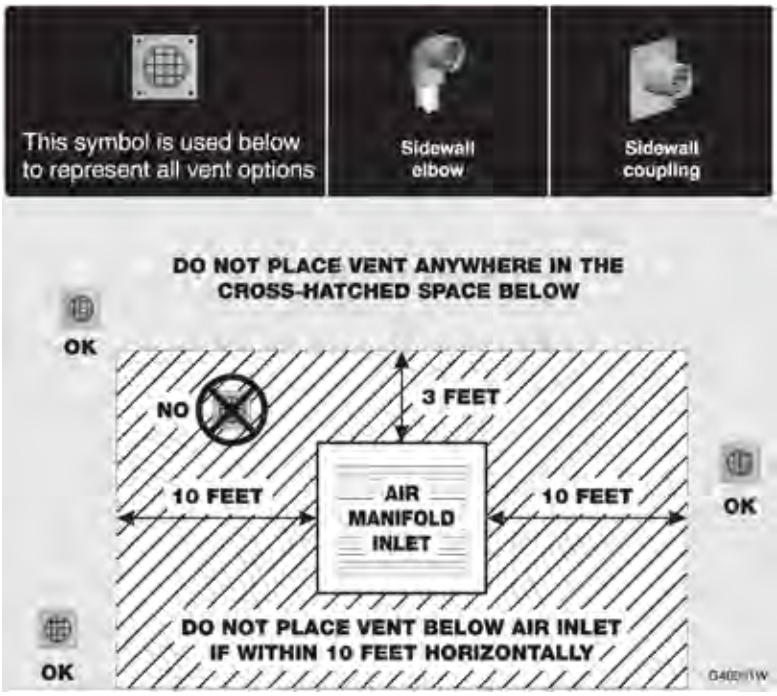

WARNING The air manifold inlet of GWC boilers is part of direct vent connections. It is not classified as a forced air intake with regard to spacing from adjacent boiler vents. To avoid recirculation, however, you must install the vent terminations and air inlets with the clearances specified in Figure 38, page 31. The vent must be located following the restrictions shown in Figure 41, page 35. The vent termination configuration can be any of the sidewall methods (NOT VERTICAL) shown in this manual for direct vent or direct exhaust sidewall termination installations. **THE VENTS MUST BE TERMINATED THROUGH THE SAME SIDE WALL AS THE AIR MANIFOLD INLET**.

Venting & air — general *(cont.)*

Figure 39 GWC venting and air piping — OPTIONS and PIPING LIMITS

NOTICE Vent length affects boiler input — the boiler automatically derates to compensate for pressure loss through the vent. See the derate values given in Figure 105, page 99. The longer the vent, the more the input is reduced.

GWC Model	Maximum vent and air pipe lengths (Minimum length for all applications is 2 feet) *(All applications include allowance for the termination fittings)*					
	DIRECT VENT (combustion air piped to boiler from outside)				**DIRECT EXHAUST** (combustion air from inside)	
	SIDEWALL termination		**VERTICAL** termination		**SIDEWALL** termination	**VERTICAL** termination
	3" PVC Separate pipes	3" PVC Concentric [Note 1]	3" PVC Separate pipes	3" PVC Concentric [Note 1]	3" PVC Coupling or Elbow	3" PVC Coupling
				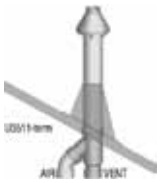		
	See page 37	See page 39	See page 41	See page 43	See page 49	See page 51
	Max. Length (feet)	Max. Length (feet)	Max. Length (feet)	Max. Length (feet)	Max. Length (feet)	Max. Length (feet)
-070	100	100	100	100	100	100
-105	100	100	100	100	100	100
-140	100	100	100	100	100	100
-175	100	100	100	100	100	100

Equivalent feet for elbows — deduct from maximum equivalent length of piping (does not apply to termination fittings)

- 7 feet per for each 3-inch 90° long-radius or 45° elbow
- 16 feet for each 3-inch short-radius elbow

Note 1:

Use only PVC pipe DO NOT use CPVC or ABS with concentric termination kits.

IPEX 3" PVC concentric vent kits can be used with standard PVC pipe, fittings and cement (ANSI/ASTM D1785) except where ULC S636 compliance is required. For ULC S636 compliance, all pipe, fittings and cement must be IPEX System 636. When using IPEX kits, use only IPEX product code 196006 for 3" venting.

Contact Williamson-Thermoflo for ordering information and availability of Williamson-Thermoflo venting kits.

Venting & air — general *(cont.)*

Figure 40 Vent and air piping materials — Use only the materials listed below, ensuring that all materials meet local codes

Item	Material	Standards for installations in: United States	Standards for installations in: Canada
Plastic piping materials			
Vent or air pipe & fittings	PVC schedule 40	ANSI/ASTM D1785	Plastic vent pipe must be certified to ULC S636 when required. (Note 2) Air pipe can be any of those listed at left if acceptable for local codes.
	PVC-DWV (Note 1)	ANSI/ASTM D2665	
	CPVC schedule 40 (Note 1)	ANSI/ASTM F441	
	ABS-DWV schedule 40 (Note 1)	ANSI/ASTM D2661	
PVC & ABS pipe cement & primer	PVC	ANSI/ASTM D2564	
	CPVC (Note 1)	ANSI/ASTM F493	
	ABS (Note 1)	ANSI/ASTM D2235	
AL29-4C piping materials			
Vent pipe AL29-4C stainless steel	Heat Fab, Inc. — Saf-T-Vent® Z-Flex, Inc. — Z-Vent II Dura-Vent — FasNSeal™ Metal-Fab, Inc. — CORR/GUARD	Certified for Category IV and direct vent appliance venting	—
Williamson-Thermoflo bird screens *(included with boiler)*			
Williamson-Thermoflo bird screens	3″ bird screen: W-T part number 383-500-105WT (two supplied with the boiler)		

Note 1: DO NOT use DWV, CPVC or ABS when using concentric vent termination. Use ONLY PVC schedule 40.

Note 2: IPEX PVC concentric terminations utilize PVC pipe/fittings certified to ULC S636. Where ULC S636 compliance is required, use only IPEX System 636 pipe, fittings and cement.

WARNING AL29-4C vent piping — Install a PVC-to-stainless adapter supplied by the vent pipe manufacturer at the boiler vent connection and at the termination (when using concentric PVC termination). DO NOT mix piping from different vent pipe manufacturers unless using adapters specifically designed for the purpose by the manufacturer.

WARNING Plastic piping — Do not attempt to connect different types of plastic piping together.

WARNING DO NOT use cellular core pipe.

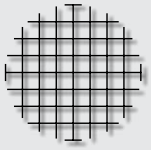

WARNING **ALL** vent and air pipes require a **BIRD SCREEN at each termination**. Two bird screens are supplied with each GWC boiler.

Commonwealth of Massachusetts installations

Commonwealth of Massachusetts — When the boiler is installed within the Commonwealth of Massachusetts, the boiler must be installed by a licensed plumber or gas fitter. Read and comply with the instructions below.

(a) For all sidewall horizontally-vented gas-fueled equipment installed in every dwelling, building or structure used in whole or in part for residential purposes, including those owned or operated by the Commonwealth and where the side wall exhaust vent termination is less than seven (7) feet above finished grade in the area of the venting, including but not limited to decks and porches, the following requirements shall be satisfied:

1. **INSTALLATION OF CARBON MONOXIDE DETECTORS.** At the time of installation of the side wall horizontal vented gas fueled equipment, the installing plumber or gas fitter shall observe that a hard wired carbon monoxide detector with an alarm and battery back-up is installed on the floor level where the gas equipment is to be installed. In addition, the installing plumber or gas fitter shall observe that a battery operated or hard wired carbon monoxide detector with an alarm is installed on each additional level of the dwelling, building or structure served by the side wall horizontal vented gas fueled equipment. It shall be the responsibility of the property owner to secure the services of qualified licensed professionals for the installation of hard wired carbon monoxide detectors
   a. In the event that the side wall horizontally vented gas fueled equipment is installed in a crawl space or an attic, the hard wired carbon monoxide detector with alarm and battery back-up may be installed on the next adjacent floor level.
   b. In the event that the requirements of this subdivision can not be met at the time of completion of installation, the owner shall have a period of thirty (30) days to comply with the above requirements; provided, however, that during said thirty (30) day period, a battery operated carbon monoxide detector with an alarm shall be installed.
2. **APPROVED CARBON MONOXIDE DETECTORS.** Each carbon monoxide detector as required in accordance with the above provisions shall comply with NFPA 720 and be ANSI/UL 2034 listed and IAS certified.
3. **SIGNAGE.** A metal or plastic identification plate shall be permanently mounted to the exterior of the building at a minimum height of eight (8) feet above grade directly in line with the exhaust vent terminal for the horizontally vented gas fueled heating appliance or equipment. The sign shall read, in print size no less than one-half (1/2) inch in size, "GAS VENT DIRECTLY BELOW. KEEP CLEAR OF ALL OBSTRUCTIONS."
4. **INSPECTION.** The state or local gas inspector of the side wall horizontally vented gas fueled equipment shall not approve the installation unless, upon inspection, the inspector observes carbon monoxide detectors and signage installed in accordance with the provisions of 248 CMR 5.08(2)(a) 1 through 4.

(b) **EXEMPTIONS:** The following equipment is exempt from 248 CMR 5.08(2)(a)1 through 4:
1. The equipment listed in Chapter 10 entitled "Equipment Not Required To Be Vented" in the most current edition of NFPA 54 as adopted by the Board; and
2. Product Approved side wall horizontally vented gas fueled equipment installed in a room or structure separate from the dwelling, building or structure used in whole or in part for residential purposes.

(c) **MANUFACTURER REQUIREMENTS — GAS EQUIPMENT VENTING SYSTEM PROVIDED.** When the manufacturer of Product Approved side wall horizontally vented gas equipment provides a venting system design or venting system components with the equipment, the instructions provided by the manufacturer for installation of the equipment and the venting system shall include:
1. Detailed instructions for the installation of the venting system design or the venting system components; and
2. A complete parts list for the venting system design or venting system.

(d) **MANUFACTURER REQUIREMENTS — GAS EQUIPMENT VENTING SYSTEM NOT PROVIDED.** When the manufacturer of a Product Approved side wall horizontally vented gas fueled equipment does not provide the parts for venting the flue gases, but identifies "special venting systems", the following requirements shall be satisfied by the manufacturer:
1. The referenced "special venting system" instructions shall be included with the appliance or equipment installation instructions; and
2. The "special venting systems" shall be Product Approved by the Board, and the instructions for that system shall include a parts list and detailed installation instructions.

(e) A copy of all installation instructions for all Product Approved side wall horizontally vented gas fueled equipment, all venting instructions, all parts lists for venting instructions, and/or all venting design instructions shall remain with the appliance or equipment at the completion of the installation.

Vent termination requirements

Figure 41 The vent termination must be located to meet all requirements below (also applies to vertical vent terminations). For Canadian installations, defer to the requirements of CSA B149.1 or B149.2 Installation Code.

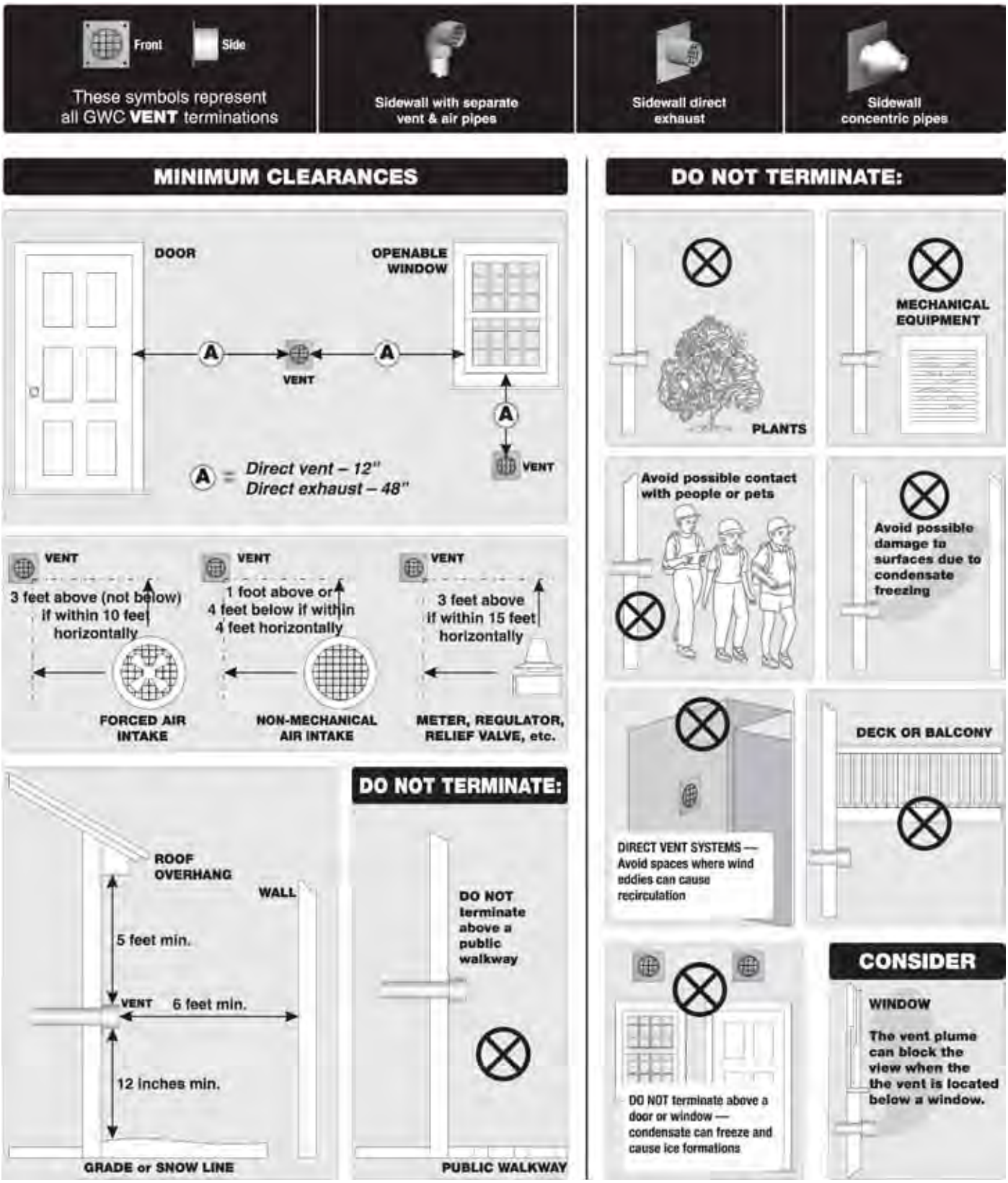

DIRECT VENT — Boiler room air openings

Figure 42 Combustion and ventilation air openings for GWC Direct Vent installations

WARNING The GWC boiler CANNOT be in the same space with other appliances if clearances around the GWC are less than the recommended service clearances shown in Figure 2, page 6.

Air openings The required air opening sizes below are FREE AREA, after reduction for louver obstruction. Note the exception below for large spaces.	**GWC boiler WITH other appliances in room**	**GWC boiler WITHOUT other appliances in room**
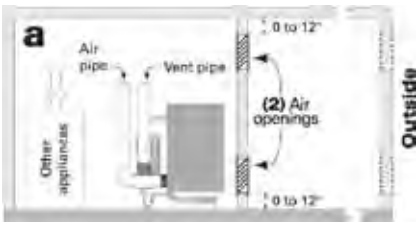	**TWO** openings, each at least: **1** square inch per **1,000** Btuh of all other appliances in the room	**NO** openings are required if the boiler installation provides at least the recommended service clearances shown in Figure 2, page 6. ***If the space is smaller than Figure 2, page 6, provide openings ONLY as shown on page 7 and Figure 4, page 7***.
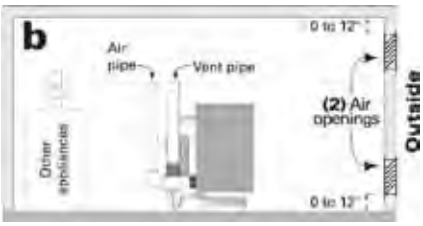	**TWO** openings, each at least: **1** square inch per **4,000** Btuh of all other appliances in the room — OR — **ONE** opening **, each at least: **1** square inch per **3,000** Btuh of all other appliances in the room	
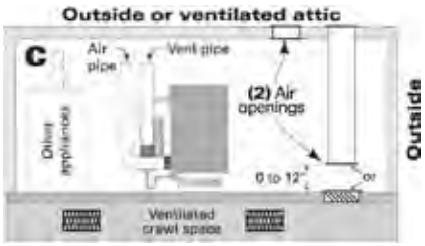	**TWO** openings, each at least: **1** square inch per **2,000** Btuh of all other appliances in the room — OR — **ONE** opening **, each at least: **1** square inch per **3,000** Btuh of all other appliances in the room	
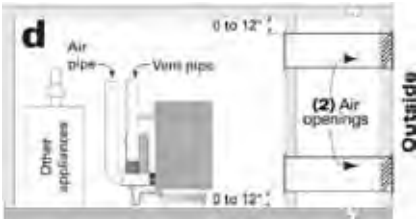	**TWO** openings, each at least: **1** square inch per **4,000** Btuh of all other appliances in the room — OR — **ONE** opening **, each at least: **1** square inch per **3,000** Btuh of all other appliances in the room	
**** NOTICE:** **Requirements for using the SINGLE air opening option.**	A single combustion air opening can be used for cases b, c or d above (GWC with other appliances in room only), sized as listed, provided that: • The single opening must communicate directly to the outdoors or to a space that communicates directly with outdoors (NOT to an interior space). • The top of the opening must be within 12 inches of the ceiling. • The free area of the opening must be at least equal to the sum of the areas of all equipment vent connectors in the space.	
SPECIAL EXCEPTION FOR LARGE SPACES (GWC WITH other appliances in room only):	NO combustion air openings are needed when the boiler (and other appliances) are installed in a space with a volume NO LESS than 50 cubic feet per 1,000 Btuh of all appliances in the space. That is, total the input of all appliances in MBH (1,000's of Btuh), then multiply this total times 50. The building MUST NOT be of tight construction. Example: For a total input of 500 MBH (500,000 Btuh), the minimum volume would be 50 x 500 = 25,000 cubic feet (3,125 square feet if ceiling height is 8 feet).	

DIRECT VENT — Sidewall with separate pipes

Allowable vent/air pipe materials & lengths

WARNING Use only the vent materials and kits listed in Figure 40, page 33. Provide pipe adapters if specified.

1. Locate the termination such that the total air piping and vent piping from the boiler to the termination will not exceed the maximum length given in Figure 39, page 32.

Determine termination location

1. The air and vent terminations must be installed as shown in Figure 43, page 37 and Figure 45, page 38.
2. The terminations must comply with clearances and limitations shown in Figure 41, page 35.
3. Locate the terminations so they are not likely to be damaged by foreign objects, such as stones or balls, or subject to buildup of leaves or sediment.

WARNING Do not exceed the maximum lengths of the outside vent piping shown in Figure 43, page 37. Excessive length exposed to the outside could cause freezing of condensate in the vent pipe, resulting in potential boiler shutdown. In extremely cold climates, install an insulated chase around the vent piping, particularly when using longer lengths. The chase must allow for inspection of the vent pipe, and insulation must be protected from water.

Multiple vent/air terminations

1. When terminating multiple GWC boilers, terminate each vent/air connection as described in this manual.

WARNING All vent pipes and air inlets must terminate at the same height to avoid possibility of severe personal injury, death or substantial property damage.

2. Place wall penetrations to obtain minimum clearances shown in Figure 44, page 38 for U. S. installations. For Canadian installations, provide clearances required by CSA B149.1 or B149.2 Installation Code.
3. The air inlet of a GWC boiler is part of a direct vent connection. It is not classified as a forced air intake with regard to spacing from adjacent boiler vents.
4. Combustion air (NOT vent piping) can be manifolded as shown in Figure 37, page 31.

Figure 43 INSTALLATION SEQUENCE — Separate pipes sidewall

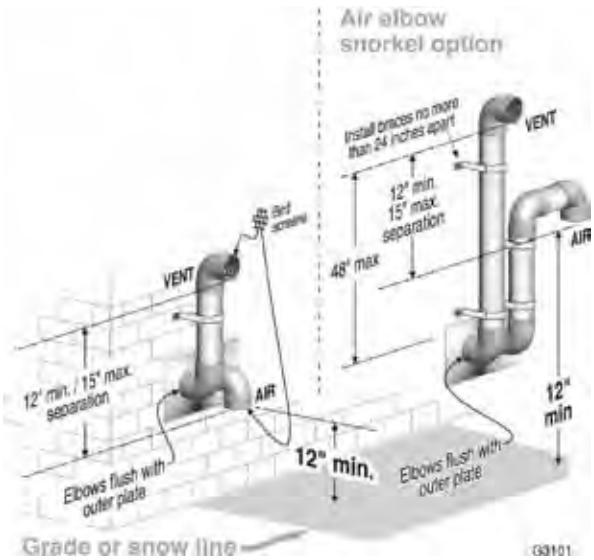

Step 1 Read and follow all instructions in this manual. **DO NOT proceed with vent/air installation until you have read page 29 through page 35.**

Step 2 Install the boiler in a location that allows proper routing of all vent and air piping to the selected sidewall location.

Step 3 Make sure the selected sidewall termination location complies with Figure 41, page 35. (Multiple boiler sidewall plates must also comply with Figure 44, page 38.)

Step 4 Use only the vent materials listed in Figure 40, page 33. Provide pipe adapters where required. Vent piping and air piping lengths must not exceed the values shown in Figure 39, page 32. ***In addition to the vent materials, this installation requires two (2) W-T sidewall termination plates and a bird screen for air and vent termination fittings, unless using an AL29-4C vent termination fitting with integral screen***. Two plates and two bird screens are supplied with the boiler for use with 3" PVC piping.

Step 5 Prepare the sidewall penetrations and secure the sidewall plates as instructed in this section. See "Prepare wall penetrations" on page 38.

Step 6 The air piping must terminate in a **down-turned elbow** as shown above. The vent piping must terminate in an **elbow pointed outward or away from the air inlet** as shown above. See illustration above.

Step 7 Install vent and air piping between the boiler and the sidewall openings. Slope horizontal piping downward toward the boiler at least 1/4 inch per foot. See page 46 for general guidelines.

Step 8 Install pipe supports every 5 feet on both the horizontal and vertical runs. Install a hanger support within 6 inches of any upturn in the piping.

Step 9 Attach the vent termination exterior piping: Use either of the configurations shown above, as needed to ensure clearance above grade or snow line.

Step 10 The vent and air pipes may run up as high as 4 feet with no enclosure. The vent and air pipes must be secured with braces, and all clearances and lengths must be maintained. Space braces no further than 24 inches apart.

Step 11 External venting greater than 4 feet requires an insulated enclosure around the vent and air pipes. The vent and air terminations must exit through the enclosure as shown in the illustration above, maintaining all required clearances.

DIRECT VENT — Sidewall with separate pipes *(continued)*

NOTICE For multiple boiler applications using the manifolded combustion air option, the vent can be terminated in an elbow as in Figure 43, page 37, or in a coupling or sidewall termination plate. The vents must be located following the restrictions in Figure 41, page 35 and Figure 38, page 31.

NOTICE In addition to the vent materials, this installation requires two (2) W-T sidewall termination plates and a bird screen for each air and vent termination fitting, unless using an AL29-4C vent termination fitting with integral screen. Two plates and two bird screens are supplied with the boiler.

Prepare wall penetrations

1. Two W-T sidewall termination plates are included with each boiler. Use one of the sidewall termination plates as a template to mark air pipe and vent pipe hole locations.
   a. Hole centers in the plates are 3¾" apart.
   b. Hole diameters are 3.14" for holes as is. Use as is for 3" AL29-4C pipe. Remove knockout to provide 3⅝" hole for 3" PVC pipe.
2. Air pipe penetration:
   a. Cut a hole for the air pipe.
   b. Size the air pipe hole as close as desired to the air pipe outside diameter.
3. Vent pipe penetration:
   a. Cut a hole for the vent pipe.
   b. Cut the vent pipe hole to at least 3.9 inches for 3" PVC vent or 3.4" for 3" AL29-4C vent.
   c. Insert a galvanized metal thimble in the vent pipe hole as shown in Figure 45.
4. Follow all local codes for isolation of vent pipe when passing through floors or walls.
5. Seal exterior openings thoroughly with exterior caulk.

Termination and fittings

1. Prepare the vent termination elbow and the air termination elbow by inserting bird screens, unless using an AL29-4C vent termination fitting with integral screen. (See Figure 43, page 37.) Two bird screens are supplied with the boiler.
2. When completed, the air termination elbow opening must be oriented at least 12 inches below the vent termination and at least 12 inches above grade or snow line as shown in Figure 43, page 37.
3. You can orient the vent termination elbow either directly outward or 90 degrees away from the air inlet elbow as shown in Figure 43, page 37.
4. Maintain the required dimensions of the finished termination piping as shown in Figure 43, page 37.
5. For multiple boiler terminations, see Figure 44, page 38.
6. Do not extend exposed vent pipe outside of building more than shown in this document. Condensate could freeze and block vent pipe.

NOTICE If extending the vent and air pipes out from the wall, install a coupling on each pipe. Mount the piping with the coupling flush with the outer plate.

Figure 44 Multiple separate pipes sidewall terminations

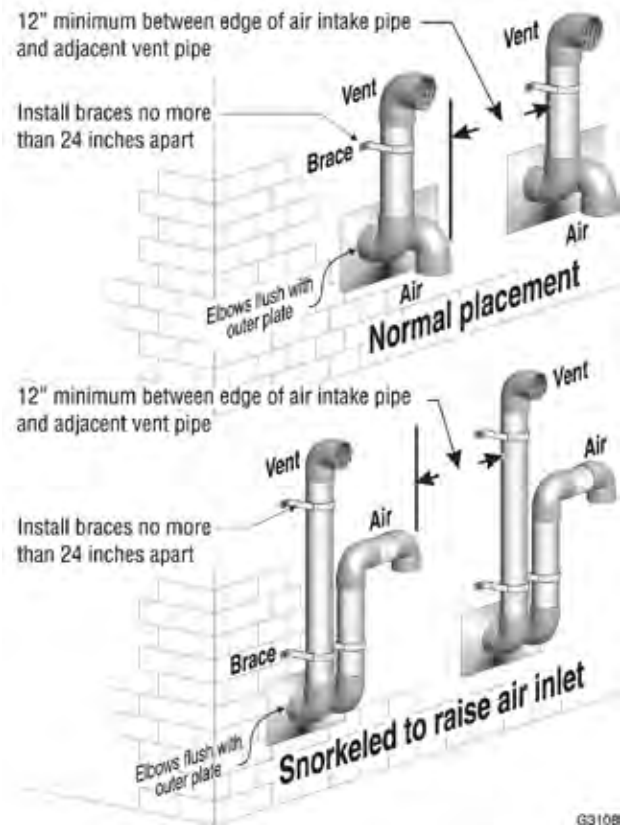

Figure 45 Sidewall termination assembly — using separate pipes

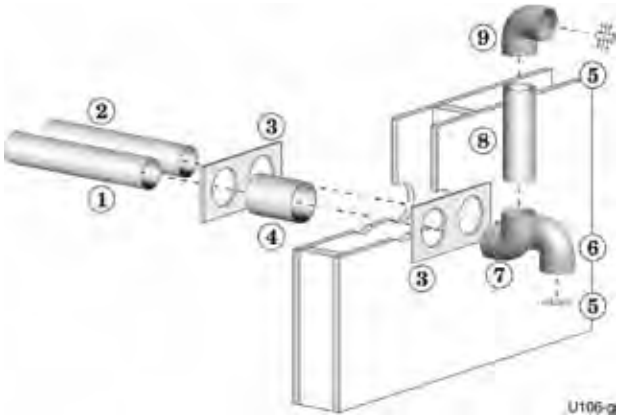

1	Vent piping	5	Bird screens, supplied with boiler
2	Air piping	6	Air inlet elbow
3	W-T sidewall termination plates, supplied with boiler (remove knockout if using PVC pipe; leave knockout in if using AL29-4C vent pipe)	7	Elbow
4	Galvanized thimbles, by installer	8	Nipple
		9	Elbow (vent termination)

DIRECT VENT — Sidewall with 3” concentric

Allowable vent/air pipe materials & lengths

1. The 3” concentric termination kit must be purchased separately.

WARNING Use only the vent materials and kits listed in Figure 40, page 33. Provide pipe adapters if specified.

2. Locate the termination such that the total air piping and vent piping from the boiler to the termination will not exceed the maximum length given in Figure 39, page 32.
3. This termination requires a 45-degree elbow that is not supplied with the termination kit. The maximum vent/air pipe lengths include allowance for this elbow.

Determine termination location

1. The concentric termination kit must be installed as shown in Figure 46, page 39.
2. The termination must comply with clearances and limitations shown in Figure 41, page 35.
3. Locate the termination so it is not likely to be damaged by foreign objects, such as stones or balls, or subject to buildup of leaves or sediment.

Multiple vent/air terminations

1. When terminating multiple GWC boilers, install each concentric termination as described in this manual.

WARNING All vent pipes and air inlets must terminate at the same height to avoid possibility of severe personal injury, death or substantial property damage.

2. Place wall penetrations to obtain minimum clearance as shown in Figure 47, page 40 for U. S. installations. For Canadian installations, provide clearances required by CSA B149.1 or B149.2 Installation Code.
3. The air inlet of a GWC boiler is part of a direct vent connection. It is not classified as a forced air intake with regard to spacing from adjacent boiler vents.

Figure 46 INSTALLATION SEQUENCE — Concentric horizontal

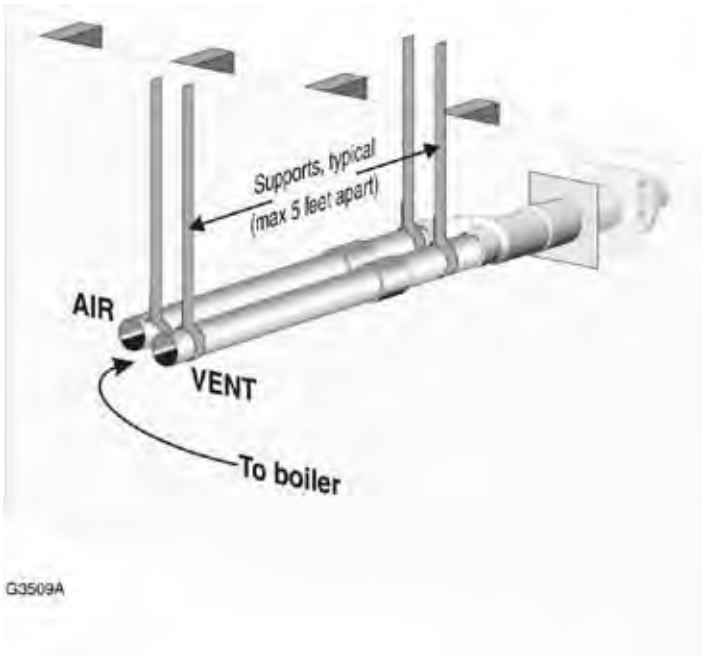

Step 1 Read and follow all instructions in this manual. **DO NOT proceed with vent/air installation until you have read page 29 through page 35.**

Step 2 Install the boiler in a location that allows proper routing of all vent and air piping to the selected sidewall location.

Step 3 Make sure the selected sidewall termination location complies with Figure 41, page 35. (Multiple boiler concentric terminations must also comply with Figure 47, page 40.)

Step 4 Use only the vent materials listed in Figure 40, page 33. Provide pipe adapters where required.

Step 5 Vent piping and air piping lengths must not exceed the values shown in Figure 39, page 32.

Step 6 The concentric termination must be assembled and installed before piping from the boiler to the termination.

Step 7 Prepare the sidewall penetration — assemble the concentric termination kit and secure the cover plates as instructed in this section. Provide the supports indicated and mount the termination assembly. See “Install termination — concentric pipes” on page 40.

Step 8 Install vent and air piping between the boiler and the concentric vent/air termination. Slope horizontal piping downward toward the boiler at least 1/4 inch per foot. See page 46 for general guidelines.

Step 9 Install pipe supports every 5 feet on both the horizontal and vertical runs.

Step 10 Install a hanger support within 6 inches of any upturn in the piping.

DIRECT VENT — Sidewall with 3” concentric *(continued)*

Install termination — concentric pipes

1. Assemble the vent termination as described for concentric terminations, on page 45.

WARNING If necessary, you can shorten the lengths of the inner and outer pipes for a shorter finished assembly. But you must ensure the pipes butt correctly at both ends. Failure to properly assemble the concentric termination can result in flue gas recirculation, causing possible severe personal injury or death.

2. Wall penetration:
   a. Preferably, use a thimble with a 4½-inch hole. If not using a thimble, carefully use a hole saw to cut a hole not larger than 4¾ inches in diameter through the wall. The finished hole must provide a solid stop for the rain cap ribs, as shown in the inset to Figure 48.
3. Secure the termination in place so the rain cap will butt against the outside wall or outer thimble plate as shown in Figure 48, page 40.
4. Before beginning vent and air piping from the boiler to the concentric termination, mount and secure the concentric termination as shown in Figure 48, page 40.

WARNING The vent and air piping must be securely supported, and must not rest its weight on the boiler fittings. Failure to properly support the vent and air piping could result in vent piping damage, resulting in possible severe personal injury, death or substantial property damage.

The supports/bracing used must support the termination assembly to prevent slippage or movement.

The clamps used on the outside of the termination pipe must not cut into the pipe or contain sharp edges that could cause a crack to form.

WARNING When inserting the partially-assembled termination kit through the wall penetration, wrap plastic or other protection over the end of the exposed assembly to prevent debris from entering the pipes. If the air passages become blocked, the boiler will not operate. Once the rain cap has been cemented to the assembly, there is no way to correct the problem. The assembly would have to be replaced if it were cut to be removed and cleaned. Altering the assembly in any way could result in severe personal injury or death due to toxic flue product emissions.

WARNING When using AL294C stainless vent pipe, use the vent pipe manufacturer’s PVC adapter when connecting to the concentric vent attachment.

5. After the assembly has been positioned in the opening and all supports have been attached, install a bird screen (supplied with boiler) and rain cap as follows:
   a. Place the bird screen on the end of the inner pipe as in Figure 54, page 45.
   b. Cement the rain cap in place as shown.

Figure 47 Termination location — concentric termination — multiple boilers — clearance from vent of one to air intake of the next

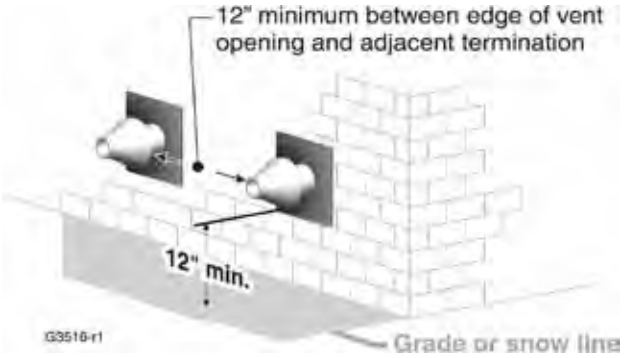

Figure 48 Installing and supporting the concentric sidewall vent assembly

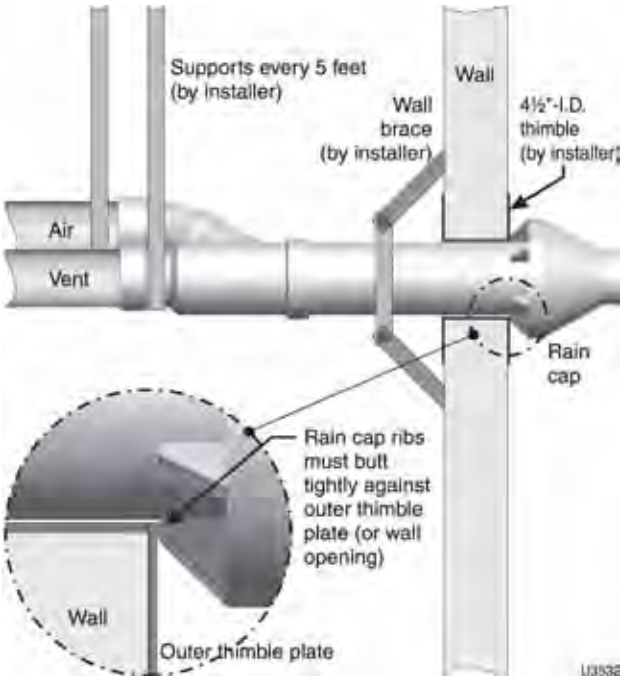

WARNING Ensure that the wall material is strong enough to prevent the rain cap from being pushed inward if struck or pushed from the outside.

DIRECT VENT — Vertical with separate pipes

Allowable vent/air pipe materials & lengths

WARNING Use only the vent materials and kits listed in Figure 40, page 33. Provide pipe adapters if specified.

1. Locate the terminations such that the total air piping and vent piping from the boiler to the termination will not exceed the maximum length given in Figure 39, page 32.

Determine termination location

1. The air and vent terminations must be installed as shown in Figure 49, page 41.
2. The terminations must comply with clearances and limitations shown in Figure 41, page 35.
3. Locate the terminations so they are not likely to be damaged by foreign objects, such as stones or balls, or subject to buildup of leaves or sediment.

Multiple vent/air terminations (Figure 50)

1. When terminating multiple GWC boilers, terminate each vent/air connection as described in this section.

WARNING Terminate all vent pipes at the same height and all air pipes at the same height to avoid possibility of severe personal injury, death or substantial property damage.

2. Place roof penetrations to obtain minimum clearance of 12 inches between edge of air intake elbow and adjacent vent pipe of another boiler for U. S. installations (see Figure 50, page 42). For Canadian installations, provide clearances required by CSA B149.1 or B149.2 Installation Code.
3. The air inlet of a GWC boiler is part of a direct vent connection. It is not classified as a forced air intake with regard to spacing from adjacent boiler vents.

Prepare roof penetrations

1. Air pipe penetration:
   a. Cut a hole for the air pipe. Size the air pipe hole as close as desired to the air pipe outside diameter.
2. Vent pipe penetration:
   a. Cut a hole for the vent pipe. For either combustible or noncombustible construction, size the vent pipe hole at least 0.4" larger than the vent pipe diameter (4" hole for 3" PVC).
   b. Insert a galvanized metal thimble in the vent pipe hole.

Figure 49 Separate pipes vertical termination

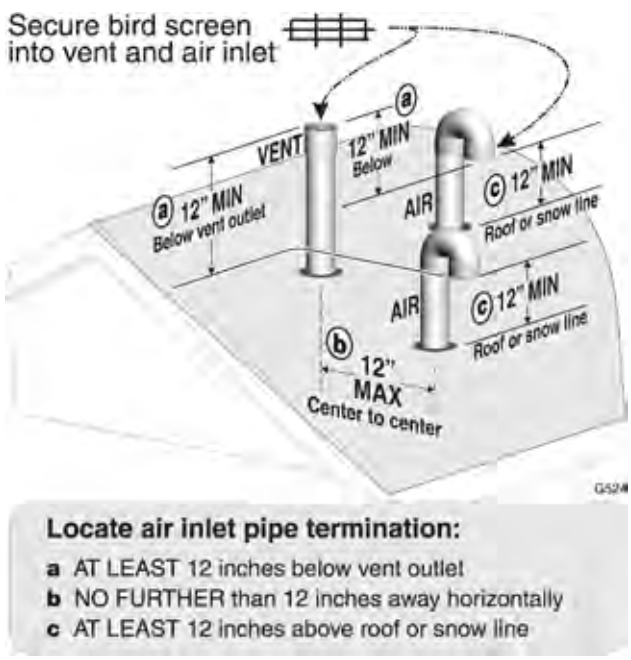

Step 1 Read and follow all instructions in this manual. **DO NOT proceed with vent/air installation until you have read page 29 through page 35.**

Step 2 Install the boiler in a location that allows proper routing of all vent and air piping to the selected sidewall location.

Step 3 Make sure the selected vertical termination location complies with Figure 41, page 35. (Multiple boiler terminations must also comply with Figure 50, page 42.)

Step 4 Use only the vent materials listed in Figure 40, page 33. Provide pipe adapters where required. Vent piping and air piping lengths must not exceed the values shown in Figure 39, page 32.

Step 5 Prepare the vertical penetrations and secure penetration components as instructed in this section. See "Prepare roof penetrations" on page 41 and "Termination and fittings" on page 42.

Step 6 The air piping must terminate in a 180-degree return bend or **down-turned elbow** as shown above. The vent piping must terminate in a **coupling pointed upward** as shown above. Vent and air terminations must be fitted with bird screens as shown. Two bird screens are supplied with the boiler.

Step 7 Install vent and air piping between the boiler and the vertical terminations. Slope horizontal piping downward toward the boiler at least 1/4 inch per foot. Install pipe supports every 5 feet on both the horizontal and vertical runs. Install a hanger support within 6 inches of any upturn in the piping. See page 46 for general guidelines.

Step 8 Insert the vent and air piping through the vertical penetrations and secure the termination fittings.

Step 9 Maintain clearances shown above. Vent and air terminations must be fitted with a bird screen as shown. See Figure 92, page 87 for part numbers.

DIRECT VENT — Vertical with separate pipes *(continued)*

3. Space the air and vent holes to provide the minimum spacings shown in Figure 49, page 41.

4. Follow all local codes for isolation of vent pipe when passing through floors, ceilings and roofs.

5. Provide flashing and sealing boots sized for the vent pipe and air pipe.

Termination and fittings

1. Prepare the vent termination elbow and the air termination elbow (Figure 49, page 41) by inserting bird screens. Two bird screens are supplied with the boiler.

2. The air piping must terminate in a down-turned 180-degree return bend as shown in Figure 49, page 41. Locate the air inlet pipe no further than 12 inches from the center of the vent pipe. This placement avoids recirculation of flue products into the combustion air stream.

3. The vent piping must terminate in an up-turned coupling as shown in Figure 49, page 41. The top of the coupling must be at least 1 foot above the air intake. The air inlet pipe and vent pipe can be located in any desired position on the roof, but must always be no further than 12 inches apart and with the vent termination at least 1 foot above the air intake.

4. Maintain the required dimensions of the finished termination piping as shown in Figure 49, page 41.

5. Do not extend exposed vent pipe outside of building more than shown in this document. Condensate could freeze and block vent pipe.

Figure 50 Terminations for multiple boilers

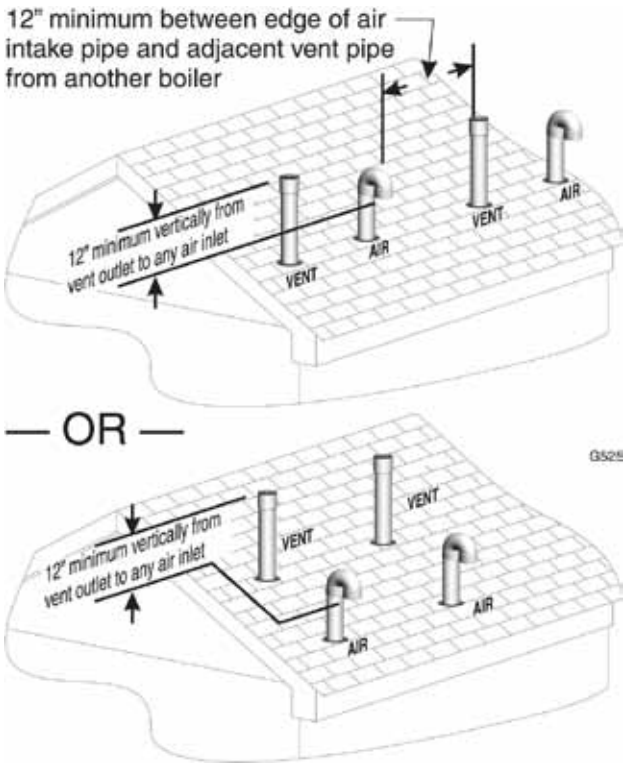

WARNING Also maintain maximum center-to-center distances between the vent and air pipes for each boiler as shown in Figure 49, page 41.

DIRECT VENT — Vertical with 3” concentric

Allowable vent/air pipe materials & lengths

1. The 3” concentric termination kit must be purchased separately.

WARNING Use only the vent materials and kits listed in Figure 40, page 33. Provide pipe adapters if specified.

2. Locate the termination such that the total air piping and vent piping from the boiler to the termination will not exceed the maximum length given in Figure 39, page 32.
3. This termination requires a 45-degree elbow that is not supplied with the termination kit. The maximum vent/air pipe lengths include allowance for this elbow.

Determine termination location

Locate the concentric vent/air termination using the following guidelines:

1. The concentric vent/air assembly must terminate as shown in Figure 52, page 44.
2. The termination must comply with the clearances and limitations shown in Figure 41, page 35.
3. Locate the termination so it is not likely to be damaged by foreign objects, such as stones or balls, or subject to buildup of leaves or sediment.
4. For Canadian installations, follow requirements of CSA B149.1 or B149.2 Installation Code.

Multiple vent/air terminations

1. When terminating multiple GWC boilers, install the concentric vent/air termination assemblies as described in this manual.

WARNING All vent outlets must terminate at the same height to avoid possibility of severe personal injury, death or substantial property damage.

2. Place roof penetrations to obtain minimum of 12 inches between centers of adjacent vent pipe of another boiler for U. S. installations (see Figure 52, page 44).
3. The air inlet of a GWC boiler is part of a direct vent connection. It is not classified as a forced air intake with regard to spacing from adjacent boiler vents.

Prepare roof penetrations

1. Roof penetration hole:
   a. Cut a 5-inch diameter hole to clear the 4½-inch termination outside diameter.
   b. Insert a galvanized metal thimble in the vent pipe hole.
2. Follow all local codes for isolation of vent pipe when passing through floors, ceilings and roofs.
3. Provide flashing and sealing boots sized for the concentric termination outside diameter.

Figure 51 INSTALLATION SEQUENCE — Concentric vertical

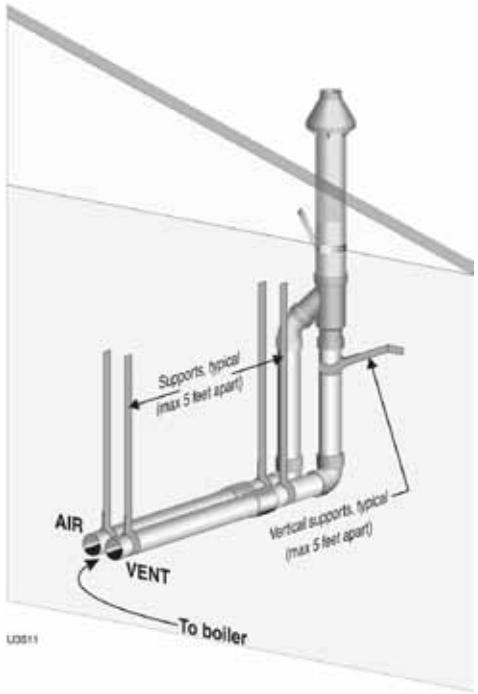

Step 1 Read and follow all instructions in this manual. **DO NOT proceed with vent/air installation until you have read page 29 through page 35.**

Step 2 Install the boiler in a location that allows proper routing of all vent and air piping to the selected sidewall location.

Step 3 Make sure the selected vertical termination location complies with Figure 41, page 35. (Multiple boiler concentric terminations must also comply with Figure 52, page 44.)

Step 4 Use only the vent materials listed in Figure 40, page 33. Provide pipe adapters where required.

Step 5 Vent piping and air piping lengths must not exceed the values shown in Figure 39, page 32.

Step 6 The concentric termination must be assembled and installed before piping from the boiler to the termination.

Step 7 Prepare the vertical penetration(s) — assemble the concentric termination kit and secure the penetration components as instructed in this section. Provide the supports indicated and mount the termination assembly. See “Prepare roof penetrations” on page 43 and “Mount concentric termination” on page 44.

Step 8 Install vent and air piping between the boiler and the concentric vent/air termination. Slope horizontal piping downward toward the boiler at least 1/4 inch per foot. See page 46 for general guidelines.

Step 9 Install pipe supports every 5 feet on both the horizontal and vertical runs.

Step 10 Install a hanger support within 6 inches of any upturn in the piping.

DIRECT VENT — Vertical with 3” concentric *(continued)*

Mount concentric termination

1. Mount the termination as shown in Figure 53, page 44.
2. Support the concentric vent/air termination at the roof penetration as shown in Figure 53.
   - The supports/bracing used must support the termination assembly to prevent vertical slippage or sideways movement.
   - The clamps used on the outside of the termination pipe must not cut into the pipe or contain sharp edges that could cause a crack to form.

WARNING The vent and air piping must be securely supported, and must not rest its weight on the boiler fittings. DO NOT drill or screw into either the vent pipe or air pipe. Failure to properly support the vent and air piping could result in vent piping damage, resulting in possible severe personal injury, death or substantial property damage.

WARNING When inserting the partially-assembled termination kit through the roof penetration, wrap plastic or other protection over the end of the exposed assembly to prevent debris from entering the pipes. If the air passages become blocked, the boiler will not operate. Once the rain cap has been cemented to the assembly, there is no way to correct the problem. The assembly would have to be replaced if it were cut to be removed and cleaned. Altering the assembly in any way could result in severe personal injury or death due to toxic flue product emissions.

WARNING When using AL294C stainless vent pipe, use the vent pipe manufacturer’s PVC adapter when connecting to the concentric vent attachment.

WARNING Do not connect any other appliance to the vent pipe or multiple boilers to a common vent pipe.

3. After the assembly has been positioned in the roof opening and all supports have been attached, install a bird screen (two bird screens are supplied with the boiler) and rain cap as follows:
   a. Place the bird screen on the end of the inner pipe as in Figure 54, page 45.
   b. Cement the rain cap in place.

Figure 52 Vertical termination — 3” PVC concentric — single or multiple boilers

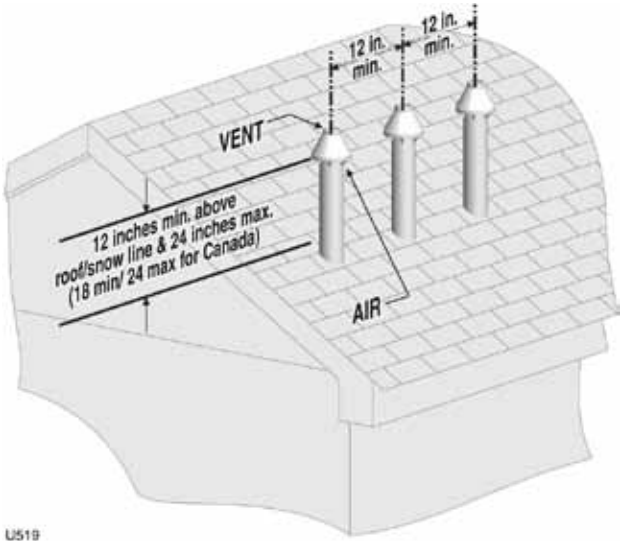

Figure 53 3” PVC concentric termination supports

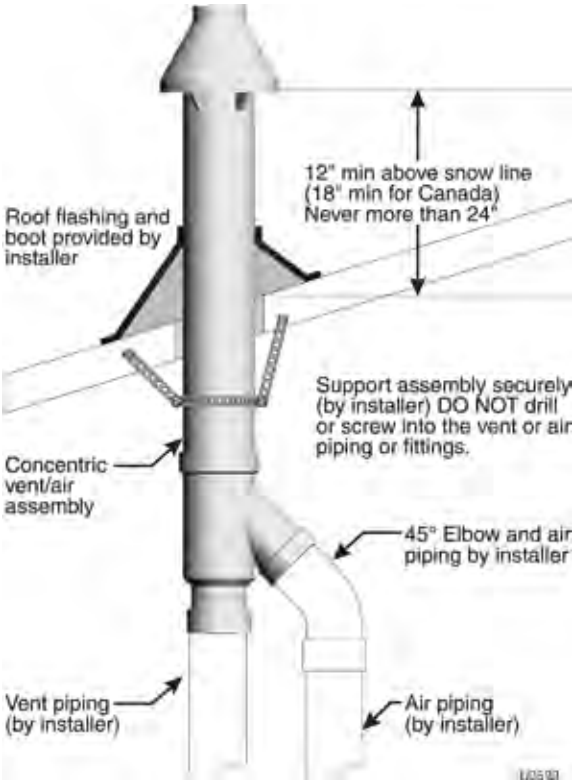

Concentric termination assembly (sidewall or vertical)

Figure 54 3" PVC concentric termination assembly — DO NOT attach the rain cap until the termination has been inserted through the roof or wall and all supports have been installed.

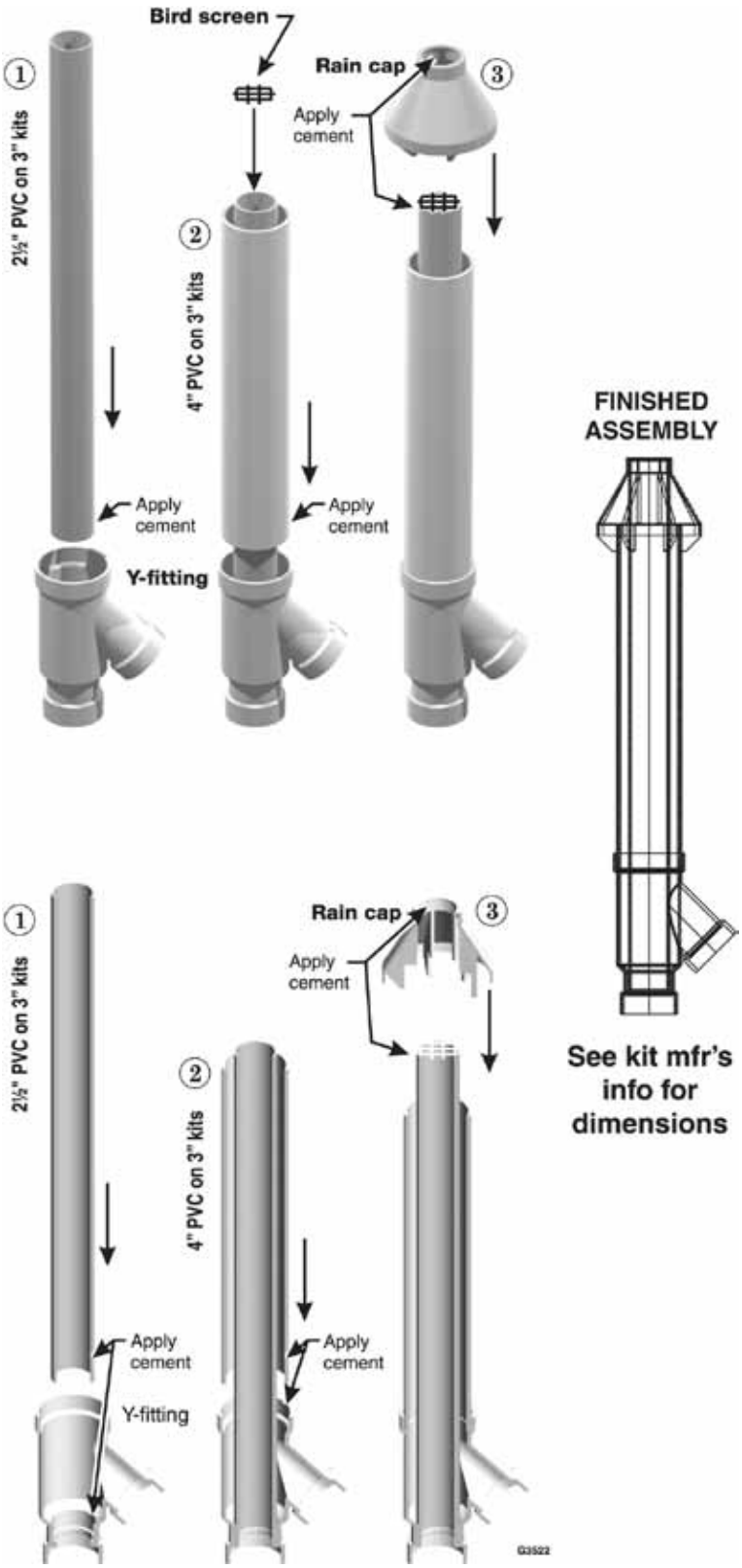

Assembling concentric termination

1. See Figure 54, page 45 for the details of the termination assembly.
2. Prepare the bird screen (two bird screens are supplied with the boiler). Cut the bird screen to size if required. If the bird screen must be trimmed, cut the bird screen to fit the outside diameter of the PVC inner pipe supplied with the termination kit.
3. Partially assemble the vent termination kit in the sequence shown in Figure 54, page 45.

WARNING **DO NOT** install the rain cap and bird screen until the assembly has been inserted through the roof (or sidewall) and all supports have been installed. Follow instructions to cover the end of the assembly with plastic before inserting through the roof penetration to prevent debris from blocking the air passages.

4. Use the following procedures to prepare termination components and cement together.
5. Deburr inside and outside of pipe ends.
6. Chamfer outside of each pipe end to ensure even cement distribution when joining.
7. Clean all pipe ends and fittings.
8. Dry thoroughly.
9. Dry assemble entire vent or air piping to ensure proper fit before assembling any joint.
10. For each joint:
    a. Handle fittings and pipes carefully to prevent contamination of surfaces.
    b. Apply primer liberally to both joint surfaces — pipe end and fitting socket.
    c. While primer is still damp, lightly apply approved cement to both surfaces in a uniform coating.
    d. Apply a second coat to both surfaces. Avoid using too much cement on sockets to prevent cement buildup inside.
    e. With cement still wet, insert pipe into fitting, twisting ¼ turn. Make sure pipe is fully inserted.

WARNING If necessary, you can shorten the lengths of the inner and outer pipes for a shorter finished assembly. But you must ensure the pipes butt correctly at both ends. Failure to properly assemble the concentric termination can result in flue gas recirculation, causing possible severe personal injury or death.

Vent and air piping and boiler connections

DIRECT EXHAUST & DIRECT VENT

Follow termination instructions

1. Read and follow all instructions for the termination type used before proceeding with this page.

Installing vent and air piping

1. Work from the boiler to vent or air termination. Do not exceed the lengths given in the previous pages for either the air or vent piping.
   a. Provide stainless pipe to PVC adapters obtained from the stainless pipe manufacturer for connections at the boiler and at terminations, when required.
2. See Figure 55 for attaching vent (and air) pipes at the boiler.
3. Cut pipe to required lengths.
4. Deburr inside and outside of pipe ends.
5. Chamfer outside of each pipe end to ensure even cement distribution when joining.
6. Clean all pipe ends and fittings. Dry thoroughly.
7. Dry assemble entire vent or air piping to ensure proper fit before assembling any joint.
8. For each joint:
   a. Handle fittings and pipes carefully to prevent contamination of surfaces.
   b. Apply primer liberally to both joint surfaces — pipe end and fitting socket.
   c. While primer is still damp, lightly apply approved cement to both surfaces in a uniform coating.
   d. Apply a second coat to both surfaces. Avoid using too much cement on sockets to prevent cement buildup inside.
   e. With cement still wet, insert pipe into fitting, twisting ¼ turn. Make sure pipe is fully inserted.
   f. Wipe excess cement from joint. Check joint to be sure a smooth bead of cement shows around the entire joint.
9. Maintain minimum clearance of 3⁄16 inch between vent pipe and any combustible wall or material.
10. Seal wall or floor penetration openings following local code requirements.

DIRECT EXHAUST ONLY

WARNING **DIRECT EXHAUST installations — air inlet opening protection**: Insert one of the bird screens supplied with the boiler into the air inlet fitting to prevent foreign objects from entering the opening.

Figure 55 Boiler vent and air connections

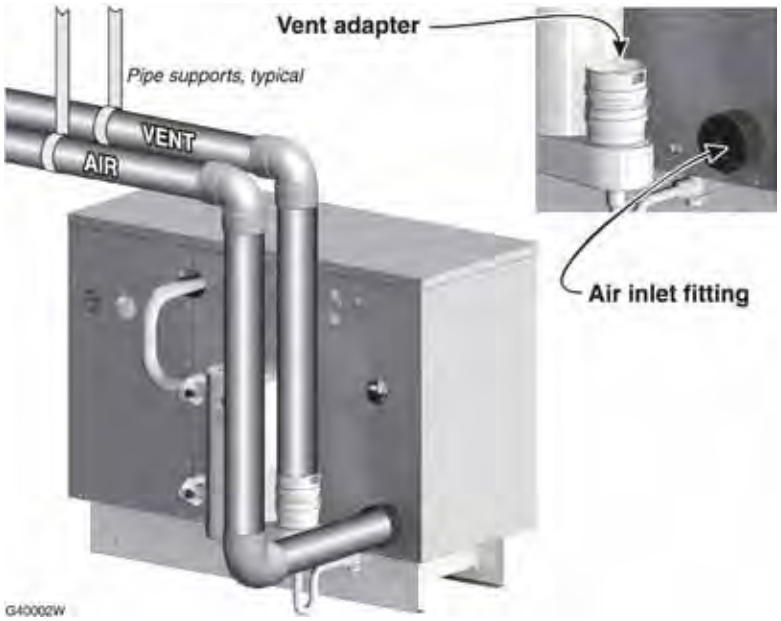

WARNING AL294C vent pipe — If using AL294C stainless vent pipe, you must install an AL29-4C stainless vent starter at the boiler vent connection (and at the termination if using the PVC concentric termination). Use only the starter made by the vent pipe manufacturer. See Replacement parts section for available AL29-4C stainless vent starters.

1. PVC/ABS pipe — Clean and deburr inside and outside of other both ends of air and vent pipes. Chamfer boiler end of vent pipe for ease of insertion.

WARNING The vent pipe end must be smooth and chamfered to prevent possible damage to sealing gasket in vent pipe adapter.

2. Inspect vent adapter and air inlet fitting (above) — verify no obstructions or foreign objects inside.
3. Vent pipe
   - Loosen vent adapter clamp screw.
   - Measure 3½ inches from boiler end of vent pipe and make a mark with felt-tip pen.
   - Apply small amount of silicon grease to boiler end of vent pipe to ease insertion.
   - Insert vent pipe into adapter to depth of felt tip pen mark.
   - Secure vent pipe by tightening the adapter clamp securely. Do not overtighten. The seal is accomplished with the internal gasket. The clamp is only to hold the pipe in place.

WARNING Do not apply excessive force or bend the vent adapter or vent pipe when inserting. The adapter or seal could be damaged.

4. Air pipe
   - Clean the outer surface of the boiler end of the air pipe.
   - Apply silicon sealant (Dow Corning 732™ or equivalent) to the outside end of the air pipe and to the inside of the air inlet fitting.
   - Insert the air pipe into the air inlet fitting and give a 1/4 turn to ensure coverage. Support until the sealant has dried.

DIRECT EXHAUST — Boiler room air openings

Combustion air provision

The GWC boiler can use inside air if no contaminants are present in the boiler space. (If contaminants are likely to be present, install the boiler as a direct vent appliance, using the appropriate vent instructions in this manual.)

The boiler room must be fitted with combustion air openings large enough to provide air for all appliances in the room. Use the following information to size the openings. Ensure the installation complies with all applicable codes and standards.

Where the GWC boiler shares a space with other appliances, the combustion air openings must be sized to handle the combined requirements of all appliances in the space.

Sizing combustion air openings

Air openings provide for ventilation (as well as combustion air) to prevent overheating of the boiler controls and boiler space. Air is also needed for other appliances located in the same space.

Use Figure 56, page 48, selecting the appropriate installation conditions.

WARNING Air openings must be sized to handle all appliances and air movers (exhaust fans, etc.) using the air supply.

The sizing given in Figure 56, page 48 is based on the National Fuel Gas Code, ANSI Z223.1, allowing adequate air openings for gravity-vented gas appliances (Category I) in addition to that needed for the GWC boiler.

The air openings recommended in Figure 56, page 48 will allow adequate ventilation and combustion air provided the boiler room is not subjected to negative pressure due to exhaust fans or other mechanical ventilation devices.

Refer to the National Fuel Gas Code for dealing with other conditions.

Free area — louver allowance

The free area of openings means the area **after reduction for any installed louvers or grilles**. Be sure to consider this reduction when sizing the air openings.

Special considerations

Tight construction

ANSI Z223.1 defines unusually tight construction where:

1. Walls and ceilings exposed to the outside atmosphere have a continuous water vapor retarder with a rating of 1 perm or less with openings gasketed, and . . .
2. Weather-stripping has been added on openable windows and doors, and . . .
3. Caulking or sealants are applied to areas such as joints around windows and door frames, between sole plates and floors, between wall-ceiling joints, between wall panels, at penetrations for plumbing, electrical, and gas lines, and in other openings.

For buildings with such construction, provide air openings into the building from outside, sized per the appropriate case in Figure 56, page 48 if appliances are to use inside air for combustion and ventilation.

Exhaust fans and air movers

The appliance space must never be under a negative pressure unless all appliances are installed as direct vent. Always provide air openings sized not only to the dimensions required for the firing rate of all appliances, but also to handle the air movement rate of the exhaust fans or air movers using air from the building or space.

Motorized air dampers

If the air openings are fitted with motorized dampers, electrically interlock the damper to:

- Prevent the boiler from firing if the damper is not fully open.
- Shut the boiler down should the damper close during boiler operation.

To accomplish this interlock, wire an **isolated contact** (proving the damper open) in series with the thermostat input to the boiler. The boiler will not start if this contact is open, and will shut down should it open during operation.

DIRECT EXHAUST — Boiler room air openings *(cont.)*

Figure 56 MINIMUM combustion air openings for direct exhaust applications — **ALL OPENING SIZES ARE FREE AREA**

⚠WARNING The GWC boiler CANNOT be in the same space with other appliances if clearances around the GWC are less than the recommended service clearances shown in Figure 2, page 6.		***If the space is smaller than Figure 2, page 6, provide openings ONLY as shown on page 7 and Figure 4, page 7.***
Air openings The required air opening sizes below are FREE AREA, after reduction for louver obstruction. Note the exception below for large spaces.	**GWC boiler WITH other appliances in room**	**GWC boiler WITHOUT other appliances in room**
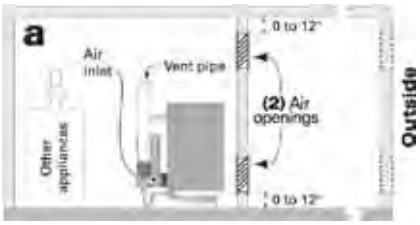	**TWO** openings, each at least: **1** square inch per **1,000** Btuh of all appliances in the room	**TWO** openings, each at least: **1** square inch per **4,000** Btuh of all appliances in the room
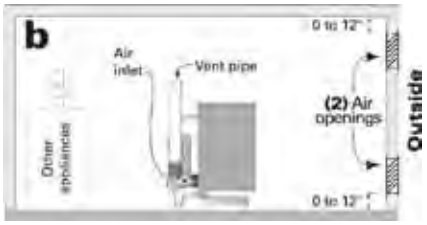	**TWO** openings, each at least: **1** square inch per **4,000** Btuh of all appliances in the room — OR — **ONE** opening **, each at least: **1** square inch per **3,000** Btuh of all appliances in the room	**TWO** openings, each at least: **1** square inch per **4,000** Btuh of all appliances in the room — OR — **ONE** opening **, each at least: **1** square inch per **3,000** Btuh of all appliances in the room
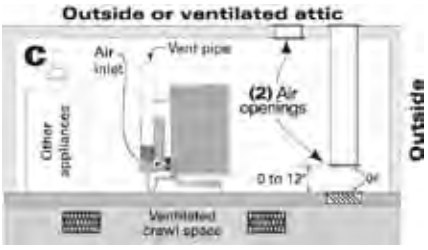	**TWO** openings, each at least: **1** square inch per **2,000** Btuh of all appliances in the room — OR — **ONE** opening **, each at least: **1** square inch per **3,000** Btuh of all appliances in the room	**TWO** openings, each at least: **1** square inch per **4,000** Btuh of all appliances in the room — OR — **ONE** opening **, each at least: **1** square inch per **3,000** Btuh of all appliances in the room
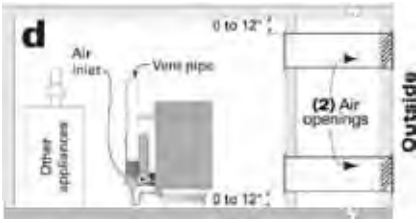	**TWO** openings, each at least: **1** square inch per **4,000** Btuh of all appliances in the room — OR — **ONE** opening **, each at least: **1** square inch per **3,000** Btuh of all appliances in the room	**TWO** openings, each at least: **1** square inch per **4,000** Btuh of all appliances in the room — OR — **ONE** opening **, each at least: **1** square inch per **3,000** Btuh of all appliances in the room
**** NOTICE:** **Requirements for using the SINGLE air opening option.**	A single combustion air opening can be used for cases **b**, **c** or **d** above, sized as listed, provided that: • The single opening must communicate directly to the outdoors or to a space that communicates directly with outdoors (NOT to an interior space). • The top of the opening must be within 12 inches of the ceiling. • The free area of the opening must be at least equal to the sum of the areas of all equipment vent connectors in the space.	
SPECIAL EXCEPTION FOR LARGE SPACES:	NO combustion air openings are needed when the boiler (and other appliances) are installed in a space with a volume NO LESS than 50 cubic feet per 1,000 Btuh of all appliances in the space. That is, total the input of all appliances in MBH (1,000's of Btuh), then multiply this total times 50. The building MUST NOT be of tight construction. Example: For a total input of 500 MBH (500,000 Btuh), the minimum volume would be 50 x 500 = 25,000 cubic feet (3,125 square feet if ceiling height is 8 feet).	

DIRECT EXHAUST — Sidewall

NOTICE **DO NOT sidewall vent DIRECT EXHAUST APPLICATIONS** at altitudes above 5,500 feet. Sidewall venting is only allowed for **DIRECT VENT** applications (ducted combustion air) at altitudes above 5,500 feet.

Allowable vent/air pipe materials & lengths

WARNING Use only the vent materials and kits listed in Figure 40, page 33. Provide pipe adapters if specified.

1. Locate the termination such that the total air piping and vent piping from the boiler to the termination will not exceed the maximum length given in Figure 39, page 32.

Determine termination location

1. The air and vent terminations must be installed as shown in Figure 57 and in Figure 58, page 50.
2. The terminations must comply with clearances and limitations shown in Figure 41, page 35.
3. Locate the termination so it is not likely to be damaged by foreign objects, such as stones or balls, or subject to buildup of leaves or sediment.

Multiple vent/air terminations

1. Terminate each vent of multiple direct exhaust GWC boilers as described in this manual for individual vents.
2. Space terminations as required for best installation practices and required maintenance.
   a. External venting greater than 4 feet requires an enclosure around the vent pipe. The vent termination must exit through the enclosure as shown in Figure 57, page 49, maintaining all required clearances.

Prepare wall penetration

NOTICE In addition to the vent materials, this installation requires two (2) sidewall termination plates and one (1) bird screen, unless using an AL29-4C termination fitting with integral screen. Sidewall plates can be made by cutting W-T sidewall plates in half or can be fabricated and supplied by the installer. Two two-hole plates and two bird screens are supplied with the boiler for use with 3" PVC pipe.

Figure 57 **INSTALLATION SEQUENCE** — Direct exhaust sidewall

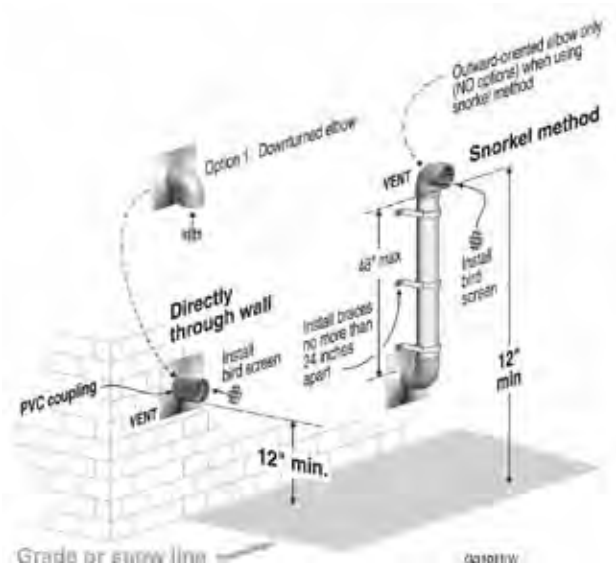

Step 1 Read and follow all instructions in this manual. **DO NOT proceed with vent installation until you have read page 29 through page 35, page 47 and page 48.**

Step 2 Install the boiler in a location that allows proper routing of vent piping to the selected sidewall location.

Step 3 Make sure the selected sidewall termination location complies with Figure 41, page 35.

Step 4 Use only the vent materials listed in Figure 40, page 33. Provide pipe adapters where required. Vent piping length must not exceed the value shown in Figure 39, page 32. ***In addition to the vent materials, this installation requires two (2) sidewall termination plates and one bird screen, unless using an AL29-4C termination fitting with integral screen***. Sidewall plates can be made by cutting a W-T sidewall plate in half or can be fabricated and supplied by the installer. Two two-hole plates and two bird screens are supplied with the boiler.

Step 5 Prepare the sidewall penetration and secure the sidewall plate as instructed in this section. See "Prepare wall penetration" on page 49 and "Termination and fittings" on page 50.

Step 6 The vent piping can terminate using a coupling or down-turned elbow, or snorkeled and terminated with an elbow. See illustration above. The coupling or elbow must butt against the outside plate.

Step 7 Install vent piping between the boiler and the sidewall opening. Slope horizontal piping downward toward the boiler at least 1/4 inch per foot. See page 46 for general guidelines.

Step 8 Install pipe supports every 5 feet on both the horizontal and vertical runs. Install a hanger support within 6 inches of any upturn in the piping.

Step 9 Attach the vent termination exterior piping, if used: Use any of the configurations shown above, as needed to ensure clearance above grade or snow line.

Step 10 The vent pipe may run up as high as 4 feet with no enclosure. The vent pipe must be secured with braces, and all clearances and lengths must be maintained. Space braces no further than 24 inches apart.

Step 11 External venting greater than 4 feet requires an insulated enclosure around the vent and air pipes. The vent and air terminations must exit through the enclosure as shown in the illustration above, maintaining all required clearances.

DIRECT EXHAUST — Sidewall *(continued)*

NOTICE Where the vent penetrates an outside wall, the annular space around the penetration must be permanently sealed using approved materials to prevent entry of combustion products into the building.

1. Wall penetration:
   a. Cut a rough opening large enough to clear the diameter of the metal thimble used.
   b. The metal plates can be field fabricated or can be made by cutting a W-T sidewall termination plate in half — two 2-hole plates are supplied with the boiler.
   c. The W-T plate hole diameters are 3.14" for holes as is. Use as is for 3" AL29-4C pipe. Remove knockout to provide 3⅝" hole for 3" PVC pipe.
   d. If field fabricating the plates, the hole diameters in the metal plates must be 3⅝" for PVC pipe. For AL29-4C vent pipe and coupling (or elbow) — size hole large enough to clear vent pipe, but small enough to prevent the termination coupling (or elbow) from being pushed through.
   e. Insert a galvanized metal thimble (by installer) in the vent pipe hole as shown in Figure 58.
2. Follow all local codes for isolation of vent pipe when passing through floors or walls.

Termination and fittings

1. If using a coupling or elbow for the termination, prepare the vent termination fitting (Figure 58, page 50) by inserting a bird screen, unless using an AL29-4C termination fitting with integral screen. Bird screens are not supplied with the GWC boiler. Purchase separately from Williamson-Thermoflo. See Figure 92, page 87 for part numbers.
2. You can install the vent termination using either of the configurations shown in Figure 57, page 49.
3. Maintain the required dimensions of the finished termination piping as shown in Figure 57, page 49.
4. Do not extend exposed vent pipe outside of the building more than shown in this document. Condensate could freeze and block vent pipe.

LEGEND for Figure 58	
1	Vent piping
2	Sidewall termination plates — two 2-hole plates are supplied with the boiler — one of these can be cut in half for use in direct exhaust venting or the plate can be field fabricated) — plate holes can be used as is for 3" AL29-4C vent pipe. Remove knockout to provide clearance hole for 3" PVC pipe.
3	Galvanized thimble
4	Vent termination elbow
5	Bird screen — two bird screens are supplied with each boiler
6	Extend vent pipe through outside plate enough to attach termination coupling (or elbow when snorkeled).
7	Snorkel option (to elevate vent termination) — requires bird screen (see Figure 92, page 87 for part numbers)
8	Coupling option — requires bird screen — two bird screens are supplied with each boiler

Figure 58 DIRECT EXHAUST — Sidewall — termination assembly and termination options — all parts by installer except where shown otherwise

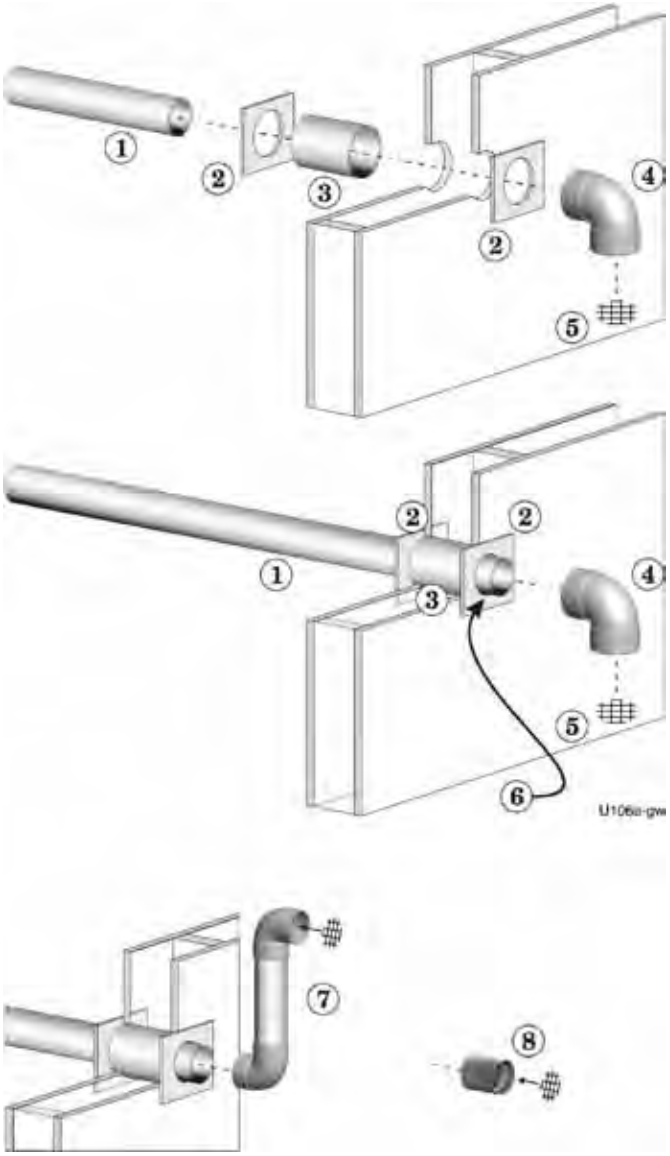

DIRECT EXHAUST — Vertical

Allowable vent/air pipe materials & lengths

WARNING Use only the vent materials and kits listed in Figure 40, page 33. Provide pipe adapters if specified.

1. Locate the termination such that the total air piping and vent piping from the boiler to the termination will not exceed the maximum length given in Figure 39, page 32.

Determine termination location

1. The vent terminations must be installed as shown in Figure 59, page 51.
2. The terminations must comply with clearances and limitations shown in Figure 41, page 35.
3. Locate the termination so it is not likely to be damaged by foreign objects, such as stones or balls, or subject to buildup of leaves or sediment.

Multiple vent/air terminations

1. Terminate each vent of multiple direct exhaust GWC boilers as described in this manual for individual vents.
2. Space terminations as required for best installation practices and required maintenance.

Prepare roof penetration

1. Vent pipe penetration:
   a. Cut a hole for the vent pipe. For either combustible or noncombustible construction, size the vent pipe hole at least 0.5" larger than the vent pipe diameter.
   b. Hole diameter in the metal plates must be at least 4" for PVC pipe. For AL29-4C vent pipe and coupling (or elbow) — size hole 0.5" larger than vent pipe outside diameter.
   c. Insert a galvanized metal thimble in the vent pipe hole.
2. Follow all local codes for isolation of vent pipe when passing through floors, ceilings and roofs.
3. Provide flashing and sealing boots sized for the vent pipe and air pipe.

NOTICE Where the vent penetrates the roof, the annular space around the penetration must be permanently sealed using approved materials to prevent entry of combustion products into the building.

Figure 59 INSTALLATION SEQUENCE — Direct exhaust vertical

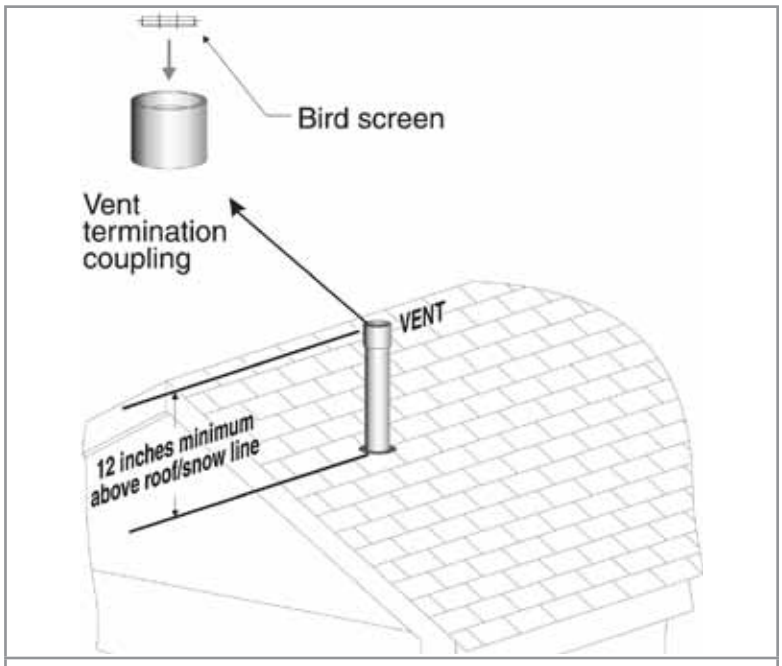

Step 1 Read and follow all instructions in this manual. **DO NOT proceed with vent/air installation until you have read page 29 through page 35, page 47 and page 48.**

Step 2 Install the boiler in a location that allows proper routing of all vent and air piping to the selected sidewall location.

Step 3 Make sure the selected vertical termination location complies with Figure 41, page 35.

Step 4 Use only the vent materials listed in Figure 40, page 33. Provide pipe adapters where required. Vent piping and air piping lengths must not exceed the values shown in Figure 39, page 32.

Step 5 Prepare the vertical penetration and secure penetration components as instructed in this section. See "Prepare roof penetrations" on page 41 and "Termination and fittings" on page 42.

Step 6 The vent piping must terminate in a **coupling pointed upward** as shown above. Fit the coupling with a bird screen as shown. Two bird screens are supplied with the boiler.

Step 7 Install vent and air piping between the boiler and the vertical termination. Slope horizontal piping downward toward the boiler at least 1/4 inch per foot. Install pipe supports every 5 feet on both the horizontal and vertical runs. Install a hanger support within 6 inches of any upturn in the piping. See page 46 for general guidelines.

Step 8 Maintain minimum clearance of 3⁄16 inch between vent pipe and any combustible wall or material.

Step 9 Insert the vent piping through the vertical penetration and secure the termination coupling.

Step 10 Maintain clearances shown above. Vent terminations must be fitted with a bird screen as shown. See Figure 92, page 87 for part numbers.

Gas piping

Connecting gas supply piping

DANGER Do not connect gas supply to boiler or attempt to operate boiler unless the correct orifice plate has been verified or installed in accordance with page 8.

Except where otherwise instructed in this manual, do not attempt to measure or adjust the outlet pressure setting of the gas valve. The gas valve is factory set to a slight negative pressure, and is operated as a negative-pressure regulated valve.

Failure to comply will result in malfunction of the boiler, causing severe personal injury, death or substantial property damage.

1. Refer to Figure 60 to connect gas supply to ½" NPT boiler gas connection. Use wrench to hold factory-installed gas cock.
2. **Support piping with hangers**, not by boiler or its accessories.
3. Purge all air from gas supply piping.
4. Before placing boiler in operation, check boiler and test all gas connections for leaks.

WARNING **Do not check for gas leaks with an open flame — use bubble test**. Failure to use bubble test or check for gas leaks can cause severe personal injury, death or substantial property damage.

Close manual main shutoff valve during any pressure testing at less than 13" w.c.

Disconnect boiler and gas valve from gas supply piping during any pressure testing greater than 13" w.c.

5. **Use pipe dope compatible with propane gases**. Apply sparingly only to male threads of pipe joints so that pipe dope does not block gas flow.

WARNING Failure to apply pipe dope as detailed above can result in severe personal injury, death or substantial property damage.

Figure 60 Gas supply connection to GWC boiler gas manifold

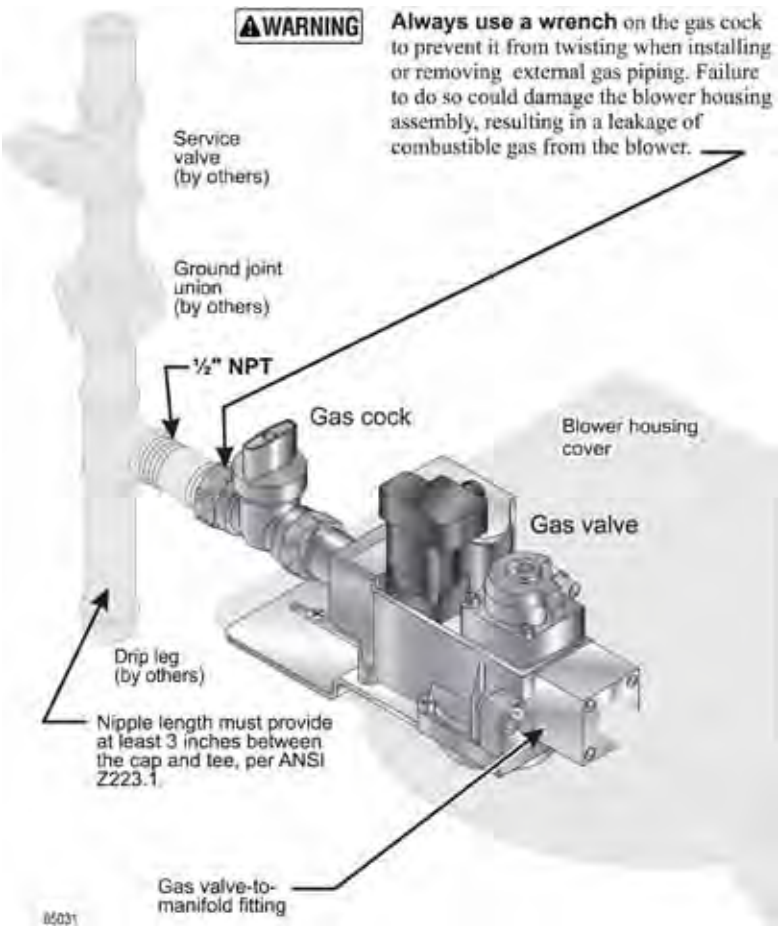

Honeywell VK8115V gas valve

- The Honeywell VK8115V gas valve operates with DC voltage.
- The black power plug that connects to the gas valve contains a DC rectifier.
- When the gas valve is energized, approximately 19 to 21 volts DC voltage should be measured across the two outer pins of the gas valve connector plug.
- There are 4 pins on the gas valve and 3 pin receptacles in the plug. Only the two outer pins are used for powering the valve.
- To measure voltage, remove the screw and slightly lift the plug until meter leads can touch end pins.
- Run boiler and test for proper voltage.
- Remember to re-install plug and tighten screw after testing.

NOTICE Continuity cannot be checked in the gas valve connector plug wiring due to the rectifier.

Gas piping *(continued)*

Natural Gas

1. Refer to Figure 61 for pipe length and diameter. Size gas supply piping for total flow to all connected appliances. For each GWC boiler, provide for the following gas flow (cfh = cubic feet per hour):

Boiler model	CFH natural gas
GWC-070	70
GWC-105	105
GWC-140	140
GWC-175	175

2. Inlet pressure required at gas valve inlet:
   - maximum 13" w.c.
   - minimum 4" w.c.

WARNING Install 100% lockup gas pressure regulator in supply line if inlet pressure exceeds 13" water column. Adjust for 13" w.c. maximum.

Propane Gas

1. Contact gas supplier to size pipes, tanks and 100% lockup gas pressure regulator.
2. Adjust propane supply regulator provided by gas supplier for 13" w.c. maximum pressure.
3. Inlet pressure required at gas valve inlet:
   - maximum 13" w.c.
   - minimum 4" w.c.

Figure 61 Pipe capacity for 0.60 specific gravity natural gas

Gas pipe length (feet)	Capacity in cubic feet of gas per hour Natural gas only, with specific gravity of 0.60 Based on pressure drop of 0.3" w.c.				
	Gas pipe diameter —				
	½"	¾"	1"	1¼"	1½"
10	132	278	520	1050	1600
20	92	190	350	730	1100
30	73	152	285	590	860
40	63	130	245	500	760
50	56	115	215	440	670
75	45	93	175	360	545
100	38	79	150	305	460
150	31	64	120	250	380

For additional gas pipe sizing information, refer to ANSI Z223.1 (or B149.1 orB149.2 for Canadian installations).

Wiring

WARNING For your safety, turn off electrical power supply at service entrance panel before making any electrical connections to avoid possible electric shock hazard. Failure to do so can cause severe personal injury or death.

Installation must comply with:

National Electrical Code and any other national, state, provincial or local codes or regulations. In Canada, CSA C22.1 Canadian Electrical Code Part 1, and any local codes. Boiler must be electrically grounded as required by National Electrical Code ANSI/NFPA 70-latest edition.

NOTICE Wiring must be N.E.C. Class 1. Boiler must be electrically grounded as required by National Electrical Code ANSI/NFPA 70-latest edition.

To replace wiring, order complete harness assemblies from Williamson-Thermoflo. If any original wiring as supplied with boiler must be replaced, and a harness is not immediately available, use only type 105°C wire or equivalent. Use this wiring only as a temporary repair. Obtain a complete harness from Williamson-Thermoflo.

Wiring connections

Power wiring

Connect 120 VAC power wiring as shown in Figure 62. The junction box is located on the inside left jacket panel.

NOTICE Watch the polarity of the circuit when connecting the 120 VAC power wiring. If the polarity is switched, the integrated boiler control will lockout. The IBC will flash the POWER light to indicate this problem. See the troubleshooting information beginning on page 73.

Additional limit controls

Wire additional limit controls (if used) as shown in Figure 63.

Thermostat(s)

Install thermostats on inside walls, away from influences of drafts, hot or cold water pipes, lighting fixtures, television, sun rays, or fireplaces.

Follow instructions with thermostat. If it has a heat anticipator, set heat anticipator in thermostat to match power requirements of equipment connected to it (ignition control and gas valve, zone valve contacts, etc.). Wiring diagram on boiler gives setting for standard equipment (ignition control and gas valve).

Thermostat wires are labeled "T-T" on boiler. Remove label before connecting as shown in Figure 62. Route this wiring through the hole in the upper left side jacket.

For zoned systems, substitute the zone valve end switches or circulator relay contacts for the thermostat contact shown in Figure 62.

Figure 62 Field wiring connections — service switch and thermostat (or end switch) provided by installer

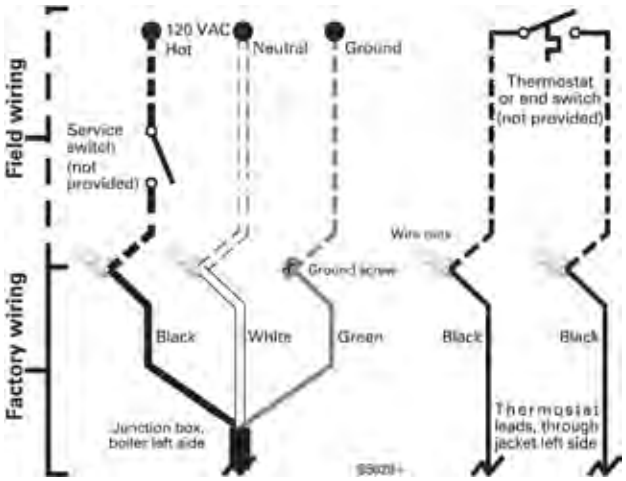

NOTICE When using three-wire zone valves, take care to avoid mis-wiring. This can impose an additional 24 volts across the boiler control circuitry. The IBC will sense this problem and lockout. It will flash the POWER and TSTAT CIRC lights to indicate the problem. See label on IBC for explanation of lockout conditions. To verify before connecting to boiler, disconnect field thermostat wires at boiler. Place a voltmeter across the leads. Then watch the voltmeter as each zone is activated (by activating zone thermostat). There should never be a voltage reading across the two leads coming to the boiler. If you see a voltage reading, one or more zone valves is mis-wired.

Carbon monoxide detector

WARNING For **Direct Exhaust** units, a carbon monoxide detector is required in the boiler room. The carbon monoxide detector must be wired on the same electrical circuit as the boiler. For **Direct Vent** units, a carbon monoxide detector that is wired on the same electrical circuit as the boiler is strongly recommended.

Figure 63 Wiring location for additional limit controls

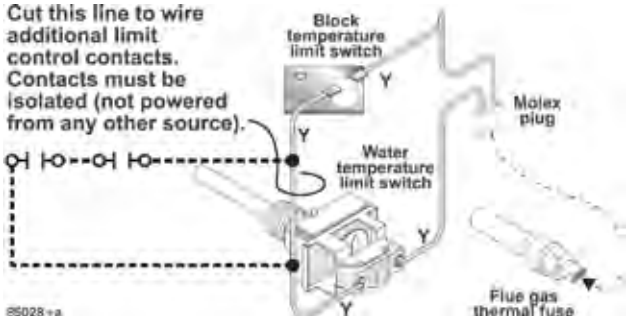

Wiring *(continued)*

Figure 64 Ladder wiring diagram

⚠WARNING Electrical shock hazard — can cause severe injury or death. Disconnect power before installing or servicing.

NOTICE All contacts are shown without power applied.

Ladder diagram legend

- 120 VAC hot field wiring
- 120 VAC neutral field wiring
- 24 VAC field wiring
- 120 VAC hot factory wiring
- 120 VAC neutral factory wiring
- Low voltage factory wiring
- Ground connectors

Notes

1. All wiring must be installed in accordance with:
   a. U.S.A. — N.E.C. and any other national, state, or local code requirements.
   b. Canada — C.S.A. C22.1 C.E.C. Part 1 and any other national, provincial, or local code requirements.
2. All wiring must be:
   a. U.S.A. — N.E.C. Class 1.
   b. Canada — C.S.A. C22.1 C.E.C. Part 1.
3. If any of the original wire as supplied with the appliance must be replaced, use type 105 °C or its equivalent.
4. Thermostat anticipator setting (single zone): 0.1 AMP + Gas valve current
5. For multiple zoning, use either zone valves or circulators. Refer to the component manufacturer's instructions and this manual for application and wiring suggestions.
6. Refer to control component instructions packed with the boiler for application information.

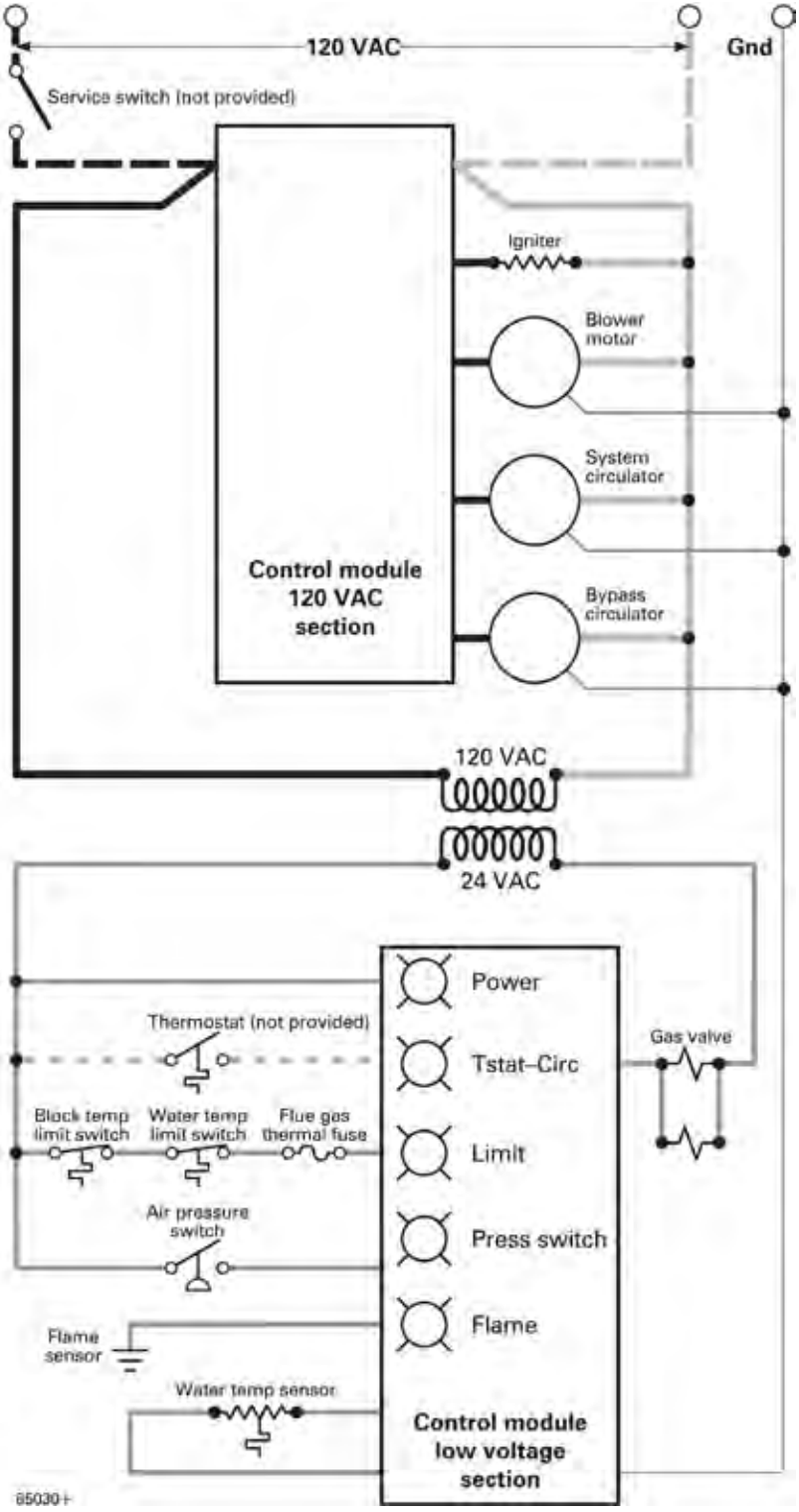

Wiring *(continued)*

Figure 65 Schematic wiring diagram

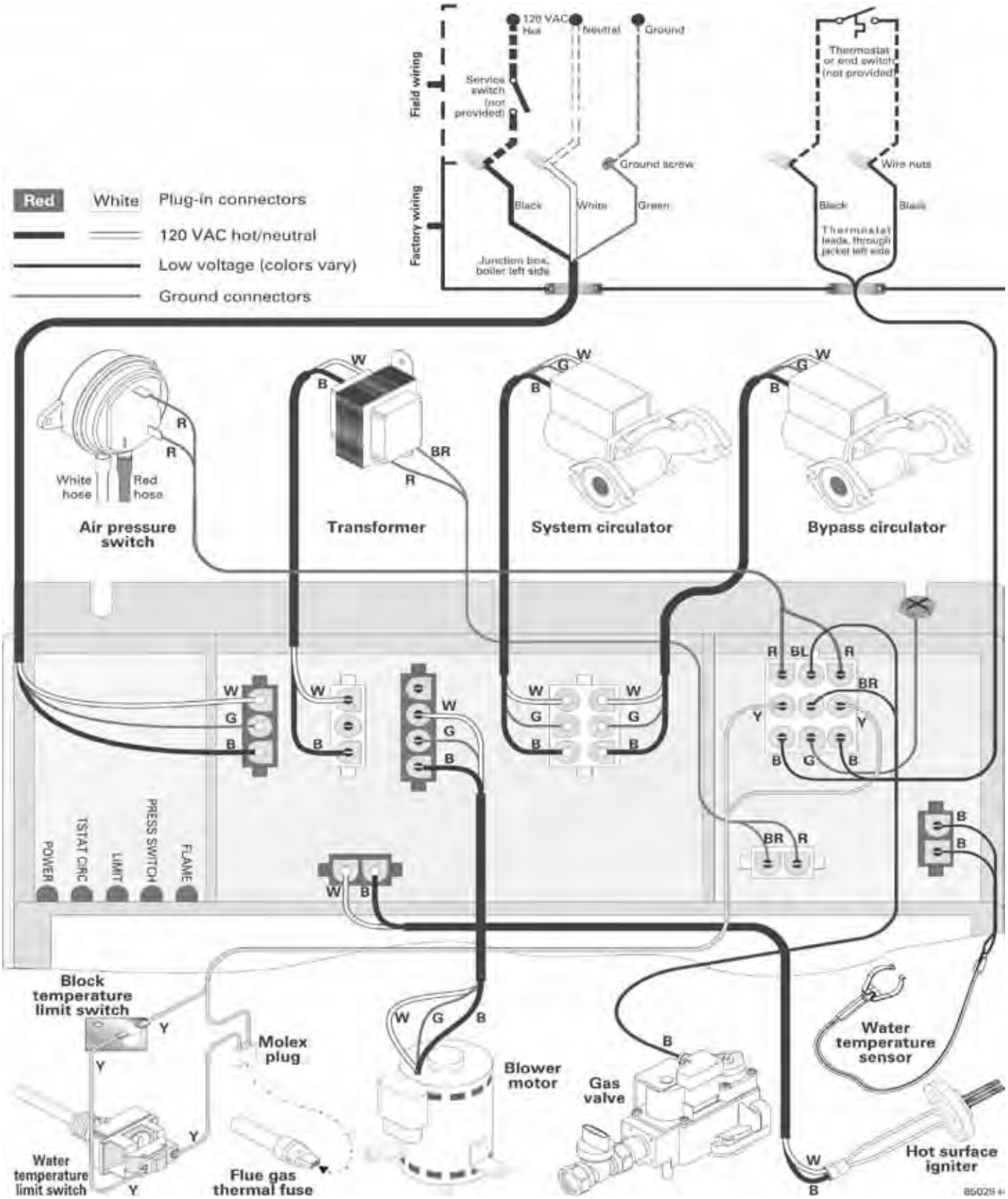

Start-up

Figure 67 Freeze protection guidelines

Freeze protection (when used)

WARNING Follow these guidelines to prevent possibility of severe personal injury, death or substantial property damage:

NEVER use automotive or standard glycol antifreeze, even glycol made for hydronic systems. Use only freeze-prevention fluids recommended by Williamson-Thermoflo for application in GWC Boiler systems.

Thoroughly flush any system that has used glycol before installing the new GWC boiler.

Review the material safety data sheet (MSDS) for the fluid used with the boiler owner and leave a copy for reference. The MSDS contains information on potential hazards and first aid procedures for exposure or ingestion.

Check antifreeze inhibitor level at least annually. Glycol concentration and inhibitor levels may change over time. Add antifreeze to increase concentration if necessary. Add inhibitor as needed to bring to acceptable level, using inhibitor test kit to verify.

When using freeze protection fluid with automatic fill, **install a water meter to monitor water make-up**. Freeze protection fluid may leak before the water begins to leak, causing concentration to drop, reducing the freeze protection level.

DO NOT exceed 50% antifreeze by volume. Antifreeze moves more sluggishly than water and can interfere with heat transfer. At antifreeze concentrations higher than 50%, sludge can develop in the boiler, potentially causing damage to the heat exchanger.

Clean the system before filling. Always drain and flush the system thoroughly before filling with antifreeze. Sludge, iron oxide deposits and other sediment in the system inhibit flow and can cause rapid breakdown of inhibitors.

WARNING Eliminate all system leaks. Continual fresh makeup water will reduce boiler life. Minerals can build up in sections, reducing heat transfer, overheating cast iron, and causing section failure.

Clean system to remove sediment

1. You must thoroughly flush the system (without boiler connected) to remove sediment. Sediment can affect chemical treatment of the system and can damage system components.
2. For zoned systems, flush each zone separately through a purge valve. (If purge valves and isolation valves are not already installed, install them to properly clean the system.)
3. Flush system until water runs clean and you are sure piping is free of sediment.

Water chemistry

WARNING **Using softened water** — Softened water can be corrosive. Pay special attention to the inhibitor level, following the instructions in this manual and those supplied with the inhibitor.

Water chemistry must be within the limits listed in the following. If the water differs in any way, consult a water treatment company to set up a treatment program to control the system water within these limits at the time of initial fill and throughout system operating life.

Failure to maintain water chemistry as specified can result in damage to the boiler and system components, resulting in potential for severe personal injury, death or substantial property damage.

Water pH: Minimum = 7.0 | Maximum = 8.5

1. Maintain boiler water pH between 7.0 and 8.5. Check with litmus paper or have chemically analyzed by water treatment company.

Hardness: Maximum = 6.0 grains per gallon

1. The water hardness must comply with the maximum value above. High hardness will cause scale accumulation.

Chlorine: Maximum 200 ppm

1. Filling with chlorinated fresh water should be acceptable since drinking water chlorine levels are typically less than 5 ppm.
2. Do not use the boiler to directly heat swimming pool or spa water.
3. Do not fill boiler or operate with water containing chlorine in excess of 200 ppm.

Antifreeze

1. Use only antifreeze listed by Williamson-Thermoflo as suitable for use with GWC boilers. A list of approved antifreeze products is available at www.Williamson-Thermoflo.com.

Start-up *(continued)*

Check for gas leaks

WARNING Before starting the boiler, and during initial operation, use a leak detector or smell near the floor and around the boiler for gas odorant or any unusual odor. Remove boiler front door and smell interior of boiler enclosure. Do not proceed with startup if there is any indication of a gas leak. Repair any leak at once.

DO NOT adjust or attempt to measure gas valve outlet pressure except where instructed specifically in this manual. This setting is suitable for natural gas and propane, requiring no field adjustment. Attempting to alter or measure the gas valve outlet pressure without following the correct procedures could result in damage to the valve, causing potential severe personal injury, death or substantial property damage.

Propane boilers only — Your propane supplier mixes an odorant with the propane to make its presence detectable. In some instances, the odorant can fade, and the gas may no longer have an odor. Before startup (and periodically thereafter), have the propane supplier verify the correct odorant level in the gas.

2. See Replacement parts at the end of this manual for Williamson-Thermoflo part numbers to obtain antifreeze through a Williamson-Thermoflo distributor.

Use the correct amount of antifreeze

1. Determine the freezing temperature needed (to protect against lowest likely temperature the system water will encounter).
2. Find the antifreeze concentration by volume needed for this temperature from the antifreeze manufacturer's data on the antifreeze container.
3. Add up the volume (gallons) of all system piping and components, including the expansion tank and boiler.
   a. Boiler water content is listed in Figure 105, page 99.
   b. Remember to include expansion tank water content.
4. Multiply this volume by the (percent) antifreeze needed to find the number of gallons of antifreeze to add.

Fill and test water system

1. Fill system only after ensuring the water meets the requirements of this manual.

Purge air from water system

1. Connect a hose to the purge valve (see purge/drain valves in piping diagrams beginning with Figure 17, page 16. Route hose to an area where water can drain and be seen.
2. Close the boiler or system isolation valve between the purge valve and fill connection to the system.
3. Close zone isolation valves.
4. Open quick-fill valve on cold water make-up line.
5. Open purge valve.
6. One zone at a time, open the isolation valves. Allow water to run through the zone, pushing out the air. Run until no noticeable air flow is present. Close the zone isolation valves and proceed with the next zone. Follow this procedure until all zones are purged.
7. Close the quick-fill water valve and purge valve and remove the hose. Open all isolation valves. Watch that system pressure rises to correct cold-fill pressure.
8. After the system has operated for a while, eliminate any residual air by using the manual air vents located throughout the system.
9. If purge valves are not installed in system, open manual air vents in system one at a time, beginning with lowest floor. Close vent when water squirts out. Repeat with remaining vents.
10. Open automatic air vent (diaphragm-type or bladder-type expansion tank systems only) one turn.
11. Starting on the lowest floor, open air vents one at a time until water squirts out.
12. Repeat with remaining vents.

Pressurize system

1. Close manual and automatic air vents and boiler drain valve.
2. Fill system to correct system pressure. Correct pressure will vary with each application.
   a. Typical cold water fill pressure for a residential system is 12 psi (when using a 30 PSIG boiler relief valve).
   b. Pressure will rise when boiler is turned on and system water temperature increases. Operating pressure must never exceed 5 PSIG less than the boiler relief valve setting.
3. At initial fill and during boiler startup and testing, check system thoroughly for any leaks. Repair all leaks before proceeding further.

WARNING Eliminate all system leaks. Continual fresh make-up water will reduce boiler life. Minerals can build up in sections, reducing heat transfer, overheating heat exchanger, and causing heat exchanger failure.

Use inhibitor supplied with boiler

1. The GWC boiler is shipped with Sentinel X100 inhibitor and Sentinel inhibitor test kit. See Replacement parts at the end of this manual for re-ordering information.
2. After filling the system as directed in these instructions, use a caulking gun to inject the X100 inhibitor into the system, following the instructions on the tube.

Start-up *(continued)*

3. Inject all of the inhibitor supplied with the boiler. Allow time for the water to circulate and mix. Then check the inhibitor level. Add additional inhibitor if necessary.

Check/verify water chemistry

1. The system may have residual substances that could affect water chemistry.
2. After the system has been filled and leak tested, verify water pH and chlorine concentrations are acceptable.
3. Verify antifreeze concentration, when used.
4. Follow the instructions on the Sentinel test kit to sample the system water and verify inhibitor concentration.

Check inhibitor concentration annually

1. Test the pH of a sample of system water at least annually. The pH of the water mixture must be between 7.0 and 8.5. (Or use the Sentinel inhibitor test kit to check concentration.)
2. If pH is outside this range (or inhibitor test kit indicates low level), the inhibitor level may not be sufficient to prevent corrosion.
3. Test antifreeze concentration.

⚠WARNING Test antifreeze concentration at least annually. If concentration is low, add antifreeze or drain system and refill with correct mixture.

4. Follow instructions on antifreeze container to determine the amount of antifreeze needed. **DO NOT** exceed 50% by volume concentration of antifreeze.
5. Check inhibitor level after adjustments are made.

Verify gas/air orifice plate

⚠DANGER **The proper orifice plate must be used**. Failure to do so will cause severe personal injury, death or substantial property damage.

1. Remove the jacket front panel.
2. Read the boiler size written on the gas/air orifice label tab, verifying the correct size. See Figure 5, page 8 for details.
3. The orifice plate must be plain aluminum for natural gas. For propane gas, the exposed tab of the plate should be red.
4. Replace the orifice plate if necessary, following the guidelines on page 8.

Check thermostat circuit(s)

1. Disconnect the two external wires connected to the boiler thermostat terminals (see Field wiring, beginning on page 54 for terminal locations).
2. Connect a voltmeter across these two incoming wires. Close each thermostat, zone valve and relay in the external circuit one at a time and check the voltmeter reading across the incoming wires.
3. There should NEVER be a voltage reading.
4. If a voltage does occur under any condition, check and correct the external wiring. (This is a common problem when using 3-wire zone valves.)
5. Once the external thermostat circuit wiring is checked and corrected if necessary, reconnect the external thermostat circuit wires. Allow the boiler to cycle.

Inspect/fill condensate system

Inspect/check condensate lines and fittings

1. Inspect the condensate drain line, condensate PVC fittings and condensate trap.

Fill condensate trap with water

1. Loosen the hose clamp (Figure 66, item 2) that secures the condensate trap (Figure 66, item 1) to the bottom of the recuperator (Figure 66, item 3).
2. Pull the condensate trap tube off of the recuperator condensate drain nipple.
3. Use a funnel to feed water into the top of the condensate tube.
4. Continue filling until water begins to flow out through the condensate line (Figure 66, item 4).
5. Re-attach the condensate trap to the bottom of the recuperator. Secure with the hose clamp.
6. Check for any leaks in the condensate drain line or fittings. Repair any leaks.
7. Remove the temporary clamp (see step 2, above) from the condensate drain tube.

⚠WARNING The condensate trap must be filled with water during all times of boiler operation to avoid flue gas emission from the condensate drain line. Prime the condensate trap by pouring water into the outlet tee while restricting flow in drain tube if boiler has been out of service for an extended period. Failure to fill the trap could result in severe personal injury or death.

Figure 66 Condensate trap assembly

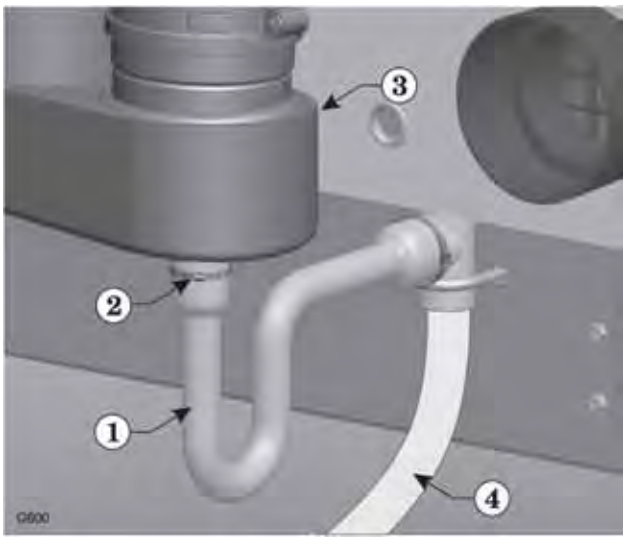

Start-up *(continued)*

Final checks before starting boiler

- ❑ Review the boiler sequence of operation in Figure 71, page 63.
- ❑ Verify that the boiler and system are full of water and all system components are correctly set for operation.
- ❑ High altitude locations (over 5,500 feet) — verify that the high altitude pressure switch is installed per page 10.
- ❑ Verify that condensate trap has been filled with water.
- ❑ Verify electrical connections are correct and securely attached.
- ❑ Inspect vent piping and air piping for signs of deterioration from corrosion, physical damage or sagging. Verify air piping and vent piping are intact and correctly installed per this manual.

To start the boiler

1. Turn OFF the boiler ON/OFF switch.
2. Read and follow the Operating Instructions, Figure 72, page 64.

If boiler does not start correctly

1. Check for loose connections, blown fuse or service switch off?
2. Is external limit control (if used) open? Is boiler water temperature above boiler limit setting?
3. Is thermostat set below room temperature?
4. Is gas turned on at meter or boiler?
5. Is incoming gas pressure less than 4" w.c.?
6. If none of the above corrects the problem, refer to Troubleshooting, beginning on page 73.

Check system and boiler after start-up

❑ Check water piping

1. Check system piping for leaks. If found, shut down boiler and repair immediately. (See WARNING on page 58 regarding failure to repair leaks.)
2. Vent any remaining air from system using manual vents. Air in the system will interfere with circulation and cause heat distribution problems and noise.

❑ Check vent piping and air piping

1. Check for gas-tight seal at every connection and seam of air piping and vent piping.

⚠WARNING Venting system must be sealed gas-tight to prevent flue gas spillage and carbon monoxide emissions which will result in severe personal injury or death.

❑ Check gas piping

1. Check around the boiler for gas odor following the procedure of page 52 of this manual.

Figure 68 Check for igniter glow by looking into observation port on front of blower housing

⚠WARNING If you discover evidence of any gas leak, shut down the boiler at once. Find the leak source with bubble test and repair immediately. Do not start boiler again until corrected. Failure to comply could result in severe personal injury, death or substantial property damage.

❑ Check the igniter

1. Inspect the igniter to verify operation as shown in Figure 68. The igniter glow may be difficult to see clearly, depending on room lighting.

Gas valve adjustment — altitude over 5,500 feet ONLY

Apply the following only when:

- Altitude is over 5,500 feet above sea level.
- You have obtained a high altitude kit (with tools needed) and installed high altitude air pressure switch per the instructions on page 10.
- Boiler has started correctly, following procedures on previous pages.

You will need the tools shown in Figure 69. Adjust the gas valve outlet pressure only if required as described in the following instructions.

Connect and adjust manometer

1. Remove boiler jacket top and front panels.
2. Close manual gas supply valve and turn off electrical power to boiler.
3. Using common bit screwdriver, remove outlet pressure tap plug from gas valve and save plug (Figure 70).
4. Place the negative side of the manometer hose over end of outlet pressure tap barrel.

Start-up *(continued)*

5. Position and zero manometer per manufacturer's instructions. The manometer must have at least 6" of tubing above the fluid level or fluid may be drawn into the gas valve.

⚠ DANGER If manometer fluid is drawn into gas valve body, gas valve must be replaced. Fluid in valve will cause it to malfunction, possibly resulting in severe personal injury, death or substantial property damage.

6. Disconnect tube from hose barb on gas valve vent tap. Connect tube end to tee hose fitting as shown in Figure 70. Then add length of hose from tee hose fitting to gas valve vent tap.
7. Connect positive side manometer hose to top of the tee hose fitting (Figure 70).
8. Connect negative side manometer hose to the barrel of the gas valve outlet pressure tap (Figure 70).

Check gas valve setpoint

1. Open manual gas valve and turn on electrical power to boiler.
2. Start boiler and allow boiler to run for 5 minutes.
3. Read manometer. This is the gas valve outlet pressure set point. If set point is between – 0.1" w.c. and – 0.3" w.c. go to step 7.
4. If gas valve setpoint is not between – 0.1" w.c. and – 0.3" w.c., use T-40 driver to remove cap on gas valve pressure regulator.
5. Turn gas valve pressure regulator screw counter clockwise ↷ to lower gas valve set point to – 0.2" w.c.
6. Reinstall cap on gas valve pressure regulator using T-40 driver.
7. Cycle boiler off and on several times to verify gas valve set point. If set point does not remain between - 0.1" w.c. and – 0.3" w.c., readjust as necessary.
8. Close manual gas supply valve and turn off electrical power to boiler.
9. Remove manometer hose from gas valve outlet pressure tap barrel and replace sealing screw.
10. Remove tee hose fitting and added tube.
11. Reinstall hose on gas valve vent tap hose barb.
12. Open manual gas supply valve and turn on electrical power to boiler.

Legend for Figure 70	
1	Gas control outlet pressure tap — located on back side of gas control. Use tap closest to gas control gas outlet —Remove screw from gas control outlet pressure tap and slide hose over tap
2	Add tee hose fitting as shown
3	Existing hose to gas control vent tap hose barb — Remove from gas control vent tap and connect to end of tee as shown
4	Gas control pressure regulator cap
5	Honeywell Type VK8115V gas valve
6	Gas outlet vent tap
7	Gas outlet piping
8	Add hose from gas control vent tap to tee hose fitting

Figure 69 Tools required for gas valve outlet pressure measurement

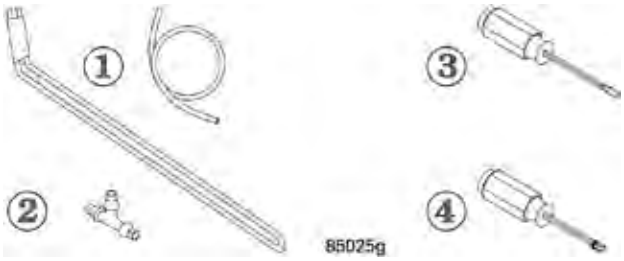

1	U-tube manometer with tubing - Manometer provides a fine scale by slanting the manometer (Dwyer Model 1227 recommended).	3	1/16" flat head screwdriver.
2	Tee hose fitting (provided in high altitude kit).	4	T-40 star drive for gas valve pressure regulator cover screw.

Figure 70 Carefully connect manometer to gas valve as shown, following instructions on this page (see legend at left)

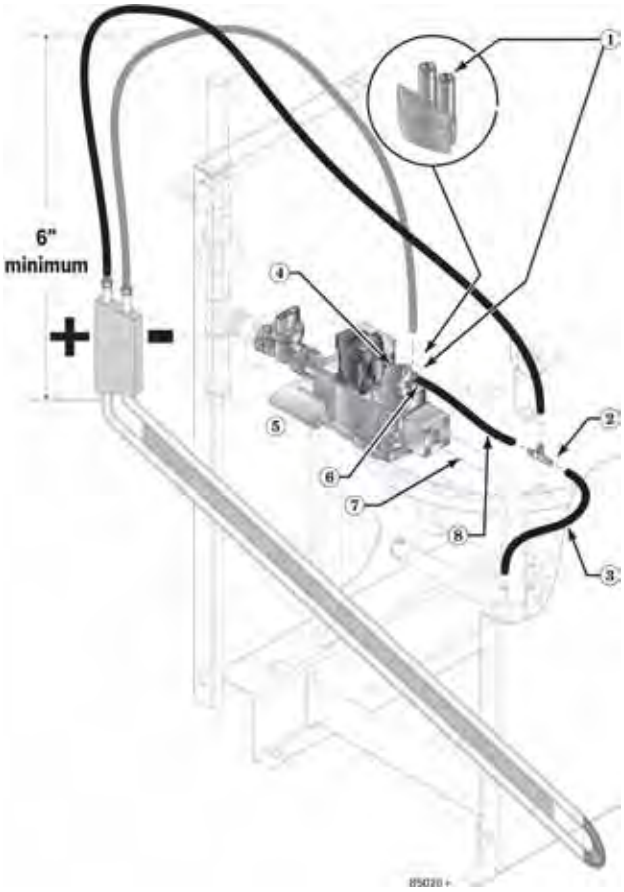

Start-up *(continued)*

Final checklist

Use the checklist following to ensure boiler is operating correctly.

Have the following been completed?

❑ Is proper orifice plate installed? Refer to page 8 to check size and fuel type.

DANGER Proper orifice plate must be used. Failure to do so will cause severe personal injury, death or substantial property damage.

❑ Thermostat heat anticipator (if available) set properly? Refer to Field wiring, page 54.

❑ Read and followed all procedures and checks specified in the Start-up section, beginning with page 57?

Perform the following

❑ Inspect vent system for leaks. Verify vent (and air) piping are functional and unobstructed.

❑ Measure natural gas input:

a. Operate boiler 10 minutes.

b. Turn off other appliances.

c. At natural gas meter, measure time (in seconds) required to use one cubic foot of gas.

d. Calculate gas input:

$$\frac{3600 \times 1000}{\text{number of seconds from step } \mathbf{c}} = \text{Btuh}$$

e. Btuh calculated should approximate input rating on boiler rating label.

❑ Test limit control — While burner is operating, move indicator on limit control below actual boiler water temperature. Blower and burner should go off while circulator continues to operate. Raise setting on limit control above boiler water temperature and burner should reignite.

❑ Test additional field-installed controls — If boiler has a low water cutoff, additional high limit or other controls, test for operation as outlined by manufacturer. Burner should be operating and should go off when controls are tested. When controls are restored, boiler should restart.

❑ Test ignition system (integrated boiler control):

f. Connect voltmeter to gas valve terminals.

g. Turn off manual gas valve.

h. Set thermostat to call for heat.

i. IBC will begin purge cycle, then activate igniter. Igniter will glow for approximately 20 seconds. Near end of 20 seconds, 24 VDC will show at gas valve for approximately 6 seconds and then return to 0 VDC. Control will attempt ignition two more times, increasing igniter time to 30 seconds for these attempts. The control will then lockout, flashing the POWER and FLAME lights.

j. To restart system, follow Operating instructions on boiler (also Figure 72, page 64). (Control will reset after power has been off for at least 45 seconds.)

❑ Set limit control(s) to system temperature requirements. Adjust balancing valves and controls to provide design temperature to system.

❑ For multiple zones, adjust flow so it is about the same in each zone or as required.

❑ Cycle boiler with thermostat — Raise to highest setting and verify boiler goes through normal start-up cycle. Lower to lowest setting and verify boiler goes off.

❑ Observe several operating cycles for proper operation.

❑ Set room thermostat to desired room temperature.

❑ Fill in Installation and service certificate (see back cover of manual).

❑ Review all instructions shipped with this boiler with owner or maintenance person. Return instructions to envelope and give to owner or place in pocket inside front panel in boiler.

Start-up *(continued)*

Figure 71 Integrated boiler control (IBC) sequence of operation — status light indications

STEPS *(After Step 8, the cycle goes back to Step 1)*	Call for Heat?	POWER	TSTAT CIRC	LIMIT	PRESS SWITCH	FLAME	Timing
1. Standby • Waiting for call for heat	**NO**	ON	OFF	OFF	OFF	OFF	—
2. Call for heat • Circulator on	**YES**	ON	ON	OFF	OFF	OFF	—
3. Limit circuit • Limit controls closed • Block switch contacts closed • Blower on	**YES**	ON	ON	ON	OFF	OFF	—
4. Pressure circuit • Pressure switch contacts closed • Ignitor glows	**YES**	ON	ON	ON	ON	OFF	**30 sec**
5. Flame proven • Gas valve open • Ignitor remains on	**YES**	ON	ON	ON	ON	ON	**6 sec**
6. Limit cycle • Limit circuit open • Gas valve closed • Blower off after postpurge	**YES**	ON	ON	OFF	OFF	OFF	**30 sec**
7. Flame outage * • Flame out	**YES**	ON	ON	ON	ON	OFF	—
8. Thermostat satisfied • Circulator off • Blower postpurge • Return to Step 1	**NO**	ON		ON	ON	OFF	**30 sec**

= ON = OFF

* If flame is not proven in 4 seconds, boiler recycles 2 times to retry for ignition before going into lockout. Recycle igniter timing is 30 seconds. Postpurge and prepurge are performed on every cycle. In event of lockout, ignition control will automatically restore sequence of operation after either:

- 1 hour waiting period.
- Opening and closing of thermostat circuit.
- Removal of 120 VAC power for at least 45 seconds

Start-up *(continued)*

Figure 72 Operating instructions

FOR YOUR SAFETY READ BEFORE OPERATING

WARNING If you do not follow these instructions exactly, a fire or explosion may result causing property damage, personal injury or loss of life.

A. This appliance does not have a pilot. It is equipped with an ignition device which automatically lights the burner. Do not try to light the burner by hand.

B. Before OPERATING, smell all around the appliance area for gas. Be sure to smell next to the floor because some gas is heavier than air and will settle on the floor. See below.

C. Use only your hand to rotate the handle on the gas cock. Never use tools. If the valve handle will not move by hand, don't try to repair it, call a qualified service technician. Force or attempted repair may result in a fire or explosion.

D. Do not use this appliance if any part has been under water. Immediately call a qualified service technician to inspect the appliance and to replace any part of the control system and any gas control, which has been under water.

WHAT TO DO IF YOU SMELL GAS

- Do not try to light any appliance.
- Do not touch any electric switch; do not use any phone in your building.
- Immediately call your gas supplier from a neighbor's phone. Follow the gas supplier's instructions.
- If you cannot reach your gas supplier, call the fire department.

OPERATING INSTRUCTIONS

1. **STOP**! Read the safety information above on this label.
2. Set the thermostat to lowest setting.
3. Turn off all electrical power to the appliance.
4. Remove jacket top panel.
5. This appliance is equipped with an ignition device which automatically lights the burner. Do not try to light the burner by hand.
6. Rotate gas cock handle clockwise ↷ to close gas line (handle perpendicular to gas line — see drawing at right).
7. Wait five (5) minutes to clear out any gas. Then smell for gas, including near the floor. If you smell gas, **STOP**! Follow "B" in the safety information above. If you don't smell gas, go to the next step.
8. Rotate gas cock handle counterclockwise ↶ to open gas line (handle lined up with gas line as in the drawing at right).
9. Turn on all electric power to the appliance.
10. Set thermostat to desired setting.
11. If the appliance will not operate, follow the instructions "**TO TURN OFF GAS TO APPLIANCE**" below and call your service technician or gas supplier.
12. Replace jacket top panel.

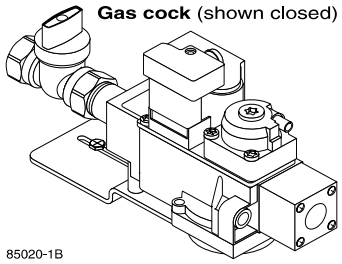

Rotate gas cock counterclockwise to open. When open, rotate clockwise to close. (See below.)

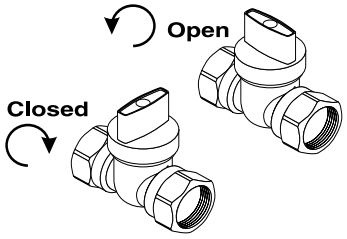

TO TURN OFF GAS TO THE APPLIANCE

1. Set the thermostat to lowest setting.
2. Turn off all electric power to the appliance if service is to be performed.
3. Remove jacket top panel.
4. Rotate gas cock handle clockwise ↷ until handle is perpendicular to gas line (see drawing above, right) to close valve.
5. Replace jacket top panel.

Annual start-up and general maintenance schedule

Figure 73 Service and maintenance schedules

Service technician (see following pages for instructions)	
Annual start-up	**General:** • Address reported problems, page 66. • Inspect boiler area, page 66. • Inspect boiler interior, page 66. • Inspect condensate drain system, page 66. • Inspect all piping for leaks, page 66. • Inspect gas piping, page 66. • Inspect the water system, page 66. • Check water system chemistry, page 66 • Inspect expansion tank, page 67. • Inspect air openings, page 67. • Inspect vent system and air piping, page 67. • Inspect boiler heating surfaces, page 67. • Inspect igniter, page 67. • Inspect recuperator, page 68. • Inspect temperature mixing system, page 68. • Inspect limit controls and cutoffs, page 68. • Inspect gauges, page 68. • Inspect blower motor, page 68. • Inspect oiled-bearing circulators, page 68. • Inspect boiler relief valve, page 69. **Additional if combustion or performance indicates the need:** • Follow procedures under Cleaning boiler heating surfaces, page 70 to access boiler components listed below. • Clean heat exchanger. • Remove and clean burner using compressed air only. • Vacuum the blower. **Review:** • Review with owner.

Owner maintenance (see following pages for instructions)	
Daily	• Check boiler area • Check air openings • Check pressure gauge
Monthly	• Check boiler interior piping • Check venting system • Check air vents • Check condensate drain system • Check relief valve
Periodically	• Test low water cutoff (if used) • Clean vent termination/air intake screens
Every 6 months	• Oil blower motor • Operate relief valve
End of season	• Shut down procedure

WARNING The boiler contains ceramic fiber and fiberglass materials. Use care when handling these materials per instructions on page 103 of this manual. Failure to comply could result in severe personal injury.

WARNING Follow the service and maintenance procedures given throughout this manual and in component literature shipped with the boiler. Failure to perform the service and maintenance could result in damage to the boiler or system. Failure to follow the directions in this manual and component literature could result in severe personal injury, death or substantial property damage.

Annual start-up

Annual start-up only by qualified service technician

WARNING The boiler should be inspected and started annually, at the beginning of the heating season, only by a qualified service technician. In addition, the maintenance and care of the boiler designated in Figure 73, page 65 and explained on the following pages must be performed to assure maximum boiler efficiency and reliability. Failure to service and maintain the boiler and system could result in equipment failure.

WARNING Electrical shock hazard — Turn off power to the boiler before any service operation on the boiler except as noted otherwise in this instruction manual. Failure to turn off electrical power could result in electrical shock, causing severe personal injury or death.

Address reported problems

1. Inspect any problems reported by owner and correct before proceeding.

Inspect boiler area

1. Verify that boiler area is free of any combustible materials, gasoline and other flammable vapors and liquids.
2. Verify that air intake area is free of any of the contaminants listed in Figure 36, page 30. If any of these are present in the boiler intake air vicinity, they must be removed. If they cannot be removed, reinstall the air and vent lines per this manual.

Inspect boiler interior

1. Remove jacket top and front door to inspect interior of boiler.
2. Vacuum any sediment and components.

WARNING Do not use solvents to clean any of the boiler components. The components could be damaged, resulting in unreliable or unsafe operation.

Inspect condensate drain system

1. Inspect the condensate trap hose for deterioration.
2. Check for any obstructions in the trap hose by squeezing the tubing.
3. If there is any doubt the condensate drain system is flowing freely, remove the clamp and hose from the bottom of the recuperator. Slide a funnel outlet into the trap hose and pour water through. It should exit at the termination of the condensate drain line.

Inspect all piping for leaks

WARNING Eliminate all system or boiler leaks. Continual fresh make-up water will reduce boiler life. Minerals can build up in sections, reducing heat transfer, overheating heat exchanger, and causing heat exchanger failure. Leaking water may also cause severe property damage.

1. Inspect all water and gas piping and verify to be leak free.
2. Look for signs of leaking lines and correct any problems found.
3. Check gas line using procedure on page 52.

Inspect gas piping

1. Sniff near floor and around boiler area for any indication of a **gas leak**.
2. **Test gas piping using bubble test,** per page 52, if there is any indication of a leak.

Inspect the water system

1. Verify all system components are correctly installed and operational.
2. Check the cold fill pressure for the system. Verify it is correct (usually around 12 PSIG).
3. Watch the system pressure as the boiler heats up (during testing) to ensure pressure doesn't rise too high. Excessive pressure rise indicates expansion tank sizing or performance problem.
4. Inspect automatic air vents and air separators. Remove air vent caps and briefly press push valve to flush vent. Reinstall caps. Make sure vents do not leak. Replace any leaking vents.

Check water system chemistry

1. Check system water chemistry (pH and hardness). See instructions beginning on page 57.
2. Check glycol and glycol inhibitor levels if using glycol/water mixture. See instructions beginning on page 57.
3. Check Sentinel X100 inhibitor level in the water using the Sentinel X100 Inhibitor Test Kit. Follow instructions supplied with the kit. Add X100 inhibitor if needed to bring to the correct level. (See Figure 92, page 87 for part numbers.)

DANGER **Do not use petroleum-based cleaning or sealing compounds in boiler system**. Severe damage to boiler will occur, resulting in substantial property damage.

Annual start-up *(continued)*

Inspect expansion tank

1. Expansion tanks provide space for water to move in and out as the heating system water expands due to temperature increase or contracts as the water cools. Tanks may be open, closed or diaphragm or bladder type. See page 13 of this manual for suggested location of expansion tanks and air eliminators.
   - Open-type — located above highest radiator or baseboard unit, usually in the attic or closet. Has a gauge glass and overflow pipe to a drain.
   - Closed-type — welded gas tight and located above boiler. Tank is partially filled with water, leaving an air cushion for expansion.
     - Make sure this type of tank is fitted with a tank fitting, such as the B & G Tank-Trol or Taco Taco-Trol. This fitting reduces gravity circulation of air-saturated tank water back to the system and prevents the air from bubbling up through the water as it returns from the system.
     - Do not use automatic air vents in systems with closed-type tanks. The air will escape from the system instead of returning to the tank. Eventually, the tank will waterlog and no longer control pressurization. The boiler relief valve will weep frequently.
   - **Diaphragm- or bladder-type** — welded gas tight with a rubber membrane to separate the tank pressurizing air and the water. May be located at any point in the system, but most often found near the boiler.
     - Systems with this type of expansion tank require at least one automatic air vent, preferably located on top of an air eliminator, as shown in examples in this manual.
2. If relief valve has tended to weep frequently, the expansion tank may be waterlogged or undersized.
   - **Closed-type tank** — tank is most likely waterlogged. Install a tank fitting if not already installed. Then check fill level per fitting manufacturer's instructions. If fill level is correct, check tank size against manufacturer's instructions. Replace with a larger tank if necessary.
   - **Diaphragm- or bladder-type** — first, check tank size to be sure it is large enough for the system. If size is too small, add additional tank (or tanks) as necessary to provide sufficient expansion. If tank size is large enough, remove tank from system and check charge pressure (usually 12 PSIG for residential applications). If tank won't hold pressure, membrane has been damaged. Replace tank.

Inspect air openings

1. Verify that combustion and ventilation air openings to the boiler room and/or building are open and unobstructed. Check operation and wiring of automatic combustion air dampers, if used.
2. Verify that boiler vent discharge and air intake are clean and free of obstructions.

Inspect vent system and air piping

1. Visually inspect entire flue gas venting system and combustion air piping for blockage, deterioration or leakage. Repair any joints that show signs of leakage in accordance with vent manufacturer's instructions. When air is ducted to boiler, verify that air inlet hose is connected and properly sealed.

⚠WARNING Failure to inspect for the above conditions and have them repaired can result in severe personal injury or death.

Figure 74 Igniter observation port in blower

Inspect boiler heating surfaces

⚠WARNING The boiler contains ceramic fiber and fiberglass materials. Use care when handling these materials per instructions on page 103 of this manual. Failure to comply could result in severe personal injury.

⚠WARNING Electrical shock hazard — **Turn off power to the boiler before any service operation** on the boiler except as noted otherwise in this instruction manual. Failure to turn off electrical power could result in electrical shock, causing severe personal injury or death.

1. Remove the jacket top panel and jacket front panel after turning off power to the boiler.
2. Remove the two nuts retaining the **flueway inspection port cover** (page 3, item **g**). Remove the **flueway inspection port cover**.
3. Inspect the boiler vent outlet area and heating surfaces by looking through the opening.
4. If the boiler flueways show accumulation of soot, follow **Cleaning boiler heating surfaces** on page 70 to remove the blower housing and clean the boiler. If there is evidence of a large accumulation of rusty scale deposits, check the temperature mixing system.
5. Replace the **flueway inspection port cover**.

Inspect igniter

1. Verify igniter operation — Look through blower observation port (see Figure 74). Access the blower by removing the boiler jacket front panel if not already removed.

Annual start-up *(continued)*

Inspect recuperator

1. Follow the procedure on page 71 to inspect the recuperator and clean if necessary.

Inspect temperature mixing system

1. Carefully check the **temperature** of the **system return piping** as it passes through the boiler jacket and on the **return pipe inside the boiler jacket** just before it enters the boiler sections. You may do this with a surface pyrometer or by lightly touching the piping with your fingers.

WARNING To avoid potential of severe burn — **Do not rest hands on or grasp pipes**. Use a light touch only. Return piping may heat up quickly.

2. The temperature of the water entering the system should quickly heat up to about **140°F**, being considerably hotter than the return water from the system.
3. This is accomplished with the **two internal boiler circulators**. The Bypass circulator (page 2, item **7**) takes hot water from the boiler supply outlet and blends it with return water. The System circulator (page 2, item **6**) slows down to aid in raising the return temperature entering the sections.
4. If the **temperature mixing system** does not work correctly, check the two circulators to be sure they are flowing water. If the circulators are operating normally but the temperature mixing system does not maintain water at the enterance to the boiler sections at 140°F, you may need to replace the boiler IBC or water temperature sensor (page 2, items **1** and **8**).

Inspect limit controls and cutoffs

1. Inspect and test the boiler limit control. Verify operation by turning control set point below boiler temperature. Boiler should cycle off. Return dial to original setting.
2. Inspect and test additional limit controls or low water cutoffs installed on system. Follow the device manufacturer's instructions.

Inspect gauges

1. Boiler pressure/temperature gauge — Inspect gauge and check whether readings are reasonable. Replace if any signs of leakage from case or improper readings.
2. System gauges (if installed) — Inspect and check readings of other gauges in system.

Figure 75 Blower motor

Inspect blower motor

1. See Figure 75. With boiler power **OFF**, place a few drops of Anderol 465 in each of the two oil cups.

WARNING Use only **Anderol 465** to lubricate the blower motor. Do not use universal household oils. Motor could be damaged, resulting in possible severe property damage.

Inspect oiled-bearing circulators

1. Both of the circulators installed in the boiler are water-lubricated. No oiling is required.
2. Check other circulators in the system. Oil any circulators requiring oil, following circulator manufacturer's instructions. Over-oiling will damage the circulator.

Annual start-up *(continued)*

Inspect boiler relief valve

1. Inspect the relief valve (Figure 76) and lift the lever to verify flow as in the following warnings, excerpted from a relief valve manufacturer's warning label. Before operating any relief valve, ensure that it is piped with its discharge in a safe area to avoid severe scald potential. Read page 12 before proceeding further.

⚠WARNING Safety relief valves should be reinspected AT LEAST ONCE EVERY THREE YEARS, by a licensed plumbing contractor or authorized inspection agency, to ensure that the product has not been affected by corrosive water conditions and to ensure that the valve and discharge line have not been altered or tampered with illegally. Certain naturally occurring conditions may corrode the valve or its components over time, rendering the valve inoperative. Such conditions are not detectable unless the valve and its components are physically removed and inspected. This inspection must only be conducted by a plumbing contractor or authorized inspection agency — not by the owner. Failure to reinspect the boiler relief valve as directed could result in unsafe pressure buildup, which can result in severe personal injury, death or substantial property damage.

⚠WARNING Following installation, the valve lever must be operated AT LEAST ONCE A YEAR to ensure that waterways are clear. Certain naturally occurring mineral deposits may adhere to the valve, rendering it inoperative. When manually operating the lever, water will discharge and precautions must be taken to avoid contact with hot water and to avoid water damage. Before operating lever, check to see that a discharge line is connected to this valve directing the flow of hot water from the valve to a proper place of disposal. Otherwise severe personal injury may result. If no water flows, valve is inoperative. Shut down boiler until a new relief valve has been installed.

2. After following the above warning directions, if the relief valve weeps or will not seat properly, replace the relief valve. Ensure that the reason for relief valve weeping is the valve and not over-pressurization of the system due to expansion tank waterlogging or under-sizing.

Figure 76 Relief valve

To complete Annual Start-up, perform startup and checks:

1. **COMPLETE** the annual start-up procedures beginning on page 66.
2. Start boiler and perform checks and tests specified in this manual.
3. Verify cold fill pressure is correct and that operating pressure does not go too high.
4. Complete the check-out procedure on page 62.

Review with owner

1. Review the User's Information Manual with the owner.
2. Emphasize the need to perform the maintenance schedule specified in the User's Information Manual (and in this manual as well).
3. Remind the owner of the need to call a licensed contractor should the boiler or system exhibit any unusual behavior.
4. Remind the owner to follow the proper shutdown procedure and to schedule an annual startup at the beginning of the next heating season.

Service & maintenance

Cleaning boiler heating surfaces

WARNING The service procedures in this manual must only be performed by a qualified boiler service technician. Failure to comply could result in severe personal injury, death or substantial property damage.

WARNING The boiler contains ceramic fiber and fiberglass materials. Use care when handling these materials per instructions on page 103 of this manual. Failure to comply could result in severe personal injury.

1. If inspection of the boiler flueways indicates the presence of soot, clean the boiler heating surfaces using the following procedure. The process requires removing the blower housing to allow spraying water through the boiler combustion chamber.
2. Before proceeding, obtain a GWC gasket replacement kit, consisting of igniter, recuperator, flueway inspection port and blower flange gaskets.

To remove the blower assembly

1. Turn off boiler by turning down the thermostat. Then turn off power at the boiler service switch. Close manual gas valve on incoming gas line to boiler.

WARNING Turn off power and gas to the boiler. Failure to do so can cause severe personal injury, death or substantial property damage.

DANGER Wait several minutes after boiler has stopped to allow the igniter to cool to avoid severe personal injury or death.

2. See Figure 77.
3. Disconnect:
   a. Remove union outside of boiler
   b. Gas tubing from gas valve outlet by removing the 4 screws securing the outlet fitting to the valve. (Save the o-ring in the fitting.)
   c. Remove gas valve and bracket
   d. Hose from gas valve to gas/air manifold
   e. Pressure switch hoses
   f. Air inlet hose
   g. Blower motor wiring harness from IBC
   h. Igniter harness connected to igniter plug
   i. Blower support bracket (remove screw securing blower housing to bracket — on left side of blower housing)
   j. Ground wire.
4. Remove the two igniter screws and washers. Carefully remove the igniter. Use care when handling — igniter is very brittle. DO NOT touch igniter surface with hands or expose to any greasy substances.
5. Remove nuts from studs securing blower housing to front section.

Figure 77 Blower housing removal procedure

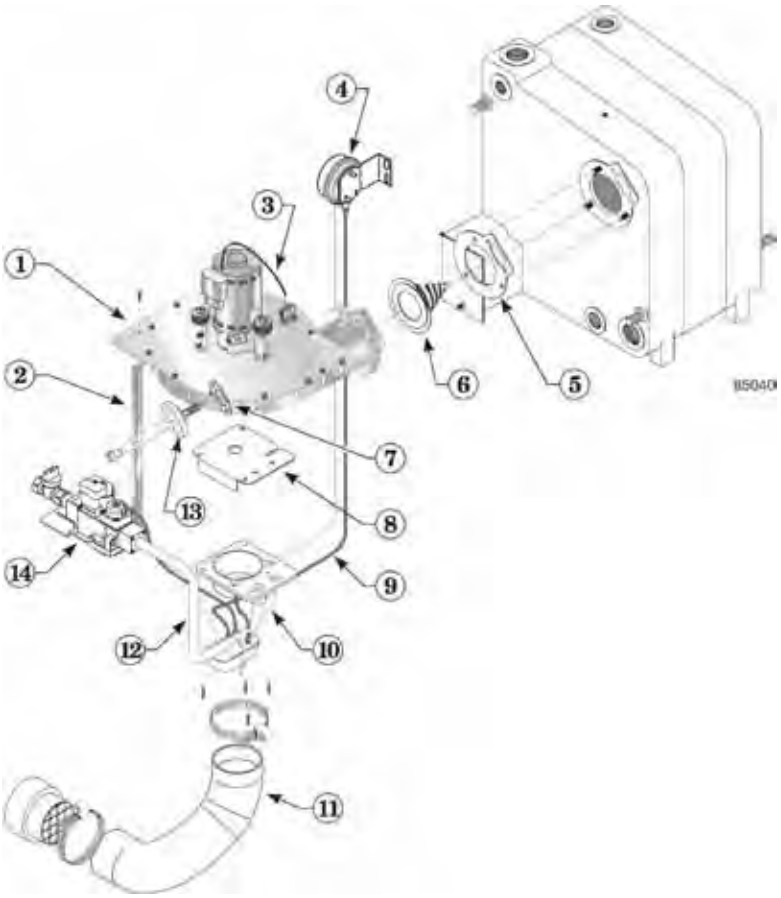

1	Blower assembly	8	Gas/air orifice plate
2	Blower support bracket	9	Red pressure switch hose
3	Blower motor wiring harness	10	White pressure switch hose
4	Air pressure switch	11	Inlet air hose and clamps
5	Blower flange gasket (**replace this**)	12	Gas tubing
6	Burner cone and ring assembly	13	Igniter
7	Igniter gasket (**replace this**)	14	Gas valve and bracket

6. Grasp blower housing and pull free from studs. Turn clockwise slightly, until blower assembly can be removed safely from inside of boiler jacket.
7. Remove burner cone and gasket for inspection.

To clean heating surfaces

1. Remove the flueway inspection port cover (page 3, item g), if not already off of the boiler.
2. Place a catch pan under the inspection port to catch the cleaning water.
3. Spray water into the boiler combustion chamber opening.
4. Catch the runoff water in the pan below the inspection port.
5. Continue process until flueways are clean.

Service & maintenance *(continued)*

To clean the burner

WARNING The burner may contain ceramic fiber particles. Use care when handling these materials per instructions on page 103 of this manual. Failure to comply could result in severe personal injury.

1. Clean the burner ports with a soft brush.
2. Use compressed air to blow out any particulate if necessary. Use caution to avoid particulate being blown into the building.

To replace blower assembly

1. Place a new blower flange gasket over the studs at combustion chamber opening.
2. Reinstall burner cone into chamber opening.
3. Position blower assembly over studs. Install nuts and tighten.
4. Install igniter and new igniter gasket. Fasten with screws and washers. Tighten only with hand-held screwdriver. DO NOT use electric or pneumatic driver. Excessive torque will damage igniter. Do not exceed 20 inch-pounds torque.
5. Connect:
   a. Gas valve and piping (4 screws)
   b. Gas tubing to gas valve outlet
   c. Pressure switch hoses
   d. Hose from gas valve to gas/air manifold
   e. Air inlet hose
   f. Blower motor wiring harness to IBC
   g. Igniter harness to igniter plug
   h. Blower support bracket (with screw)
   i. Ground wire.
6. Be sure all wiring and hose connections are correct per Figure 77, page 70 and are secure on the hose barb fittings.

Inspecting and cleaning the recuperator

WARNING Turn off power and gas to the boiler. Failure to do so can cause severe personal injury, death or substantial property damage.

WARNING Wait several minutes after boiler has stopped to allow the boiler components to cool to avoid severe personal injury or death.

1. Remove the recuperator access panel and gasket (see Figure 78) and inspect the interior with a flashlight.
2. If there are indications of debris or corrosion, disconnect the condensate trap from the bottom of the recuperator and place a catch pan underneath.
3. Flush the flueway (Figure 79, item 1) and tubes (Figure 79, item 2) thoroughly with fresh water, allowing the water to drain out through the recuperator condensate opening.
4. If all of the water doesn't drain from the flueway (Figure 79, item 1), the drain holes (see Figure 80) may be plugged. Remove the recuperator using the procedure under Removing/cleaning/re-installing the recuperator, page 72.

Figure 78 Recuperator access and cleaning

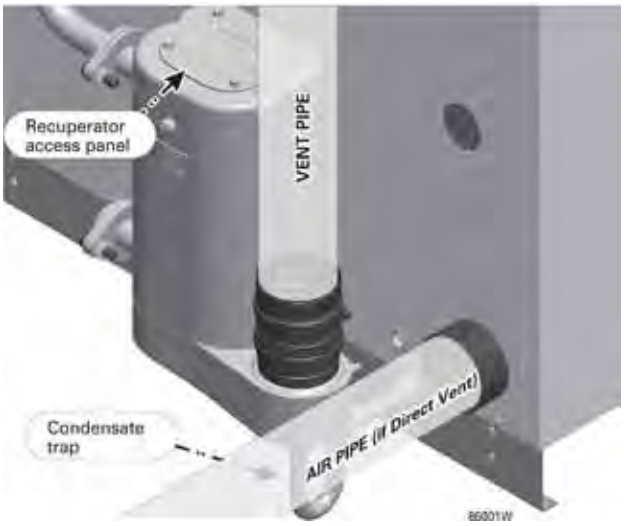

Figure 79 Recuperator with access panel removed (GWC-070/105 top, GWC-140/175 bottom)

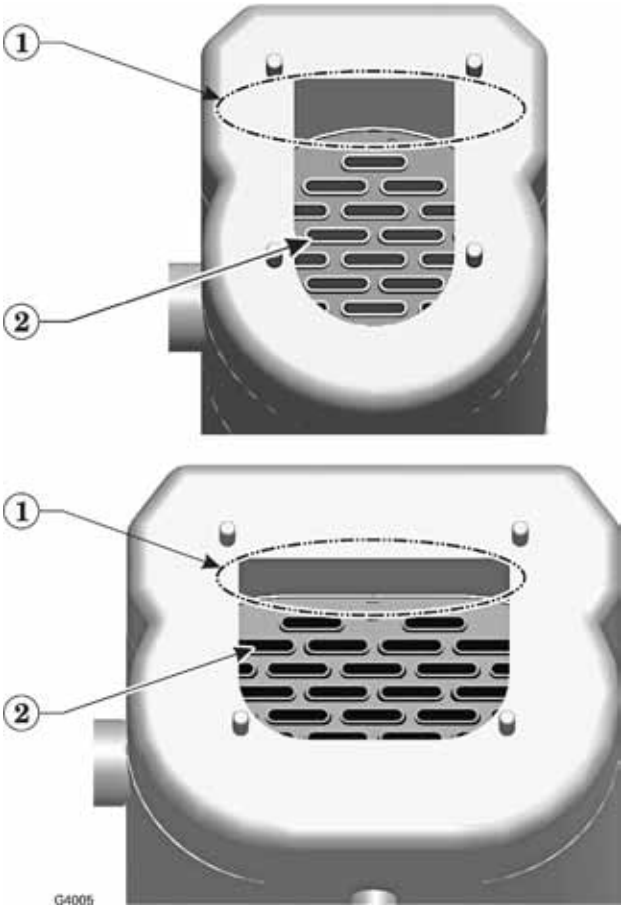

Service & maintenance *(continued)*

Removing/cleaning/re-installing the recuperator

Disconnect the vent pipe from the recuperator

1. The vent pipe must be disconnected (at the in-line flue drain, item A in Figure 7, page 9).
2. If the vent piping can be moved enough, loosen the flue pipe clamp on the in-line flue drain. Then lift the flue pipe up and move aside slightly.
3. If the vent piping cannot be moved, then cut the flue pipe carefully so a coupling can be inserted later, or remove a section of vent pipe if using stainless vent pipe.

Isolate boiler and drain partially

1. Remove the jacket top panel and front panel.
2. Allow time for the boiler to cool down if it has been operating.
3. Close the isolation valves on the boiler supply and return connections.
4. The boiler will have to be partially drained.
   a. Place a large pan under the boiler drain valve.
   b. Slowly open the drain valve and allow about a gallon of water to drain out.
   c. Place the pan under the water connection flanges on the recuperator.
   d. Loosen the upper recuperator flange and allow any water in the line to run out.
   e. Loosen the lower recuperator flange (return connection) and allow the water in the line and recuperator to drain out.
5. After the recuperator and water lines have been drained, disconnect both recuperator flanges.

Remove the recuperator

1. See Figure 98, page 93. Loosen the (4) nuts that secure the recuperator to the boiler.
2. Carefully slide the recuperator off of the (4) studs.
3. Disconnect the plug-in connector on the thermal fuse (Figure 98, page 93, item 27).
4. Loosen the flue adapter clamp and remove the in-line drain fitting from the flue adapter.
5. Dump any remaining water from the recuperator.
6. Look through the flue adapter and locate the flueway drain holes as shown in Figure 80.
7. Use a brush or other means to remove blockage from these holes.
8. Rinse the recuperator thoroughly.

Re-install the recuperator

1. Inspect the recuperator gaskets to make sure all are in good condition. Replace if there is any sign of damage.
2. Attach the recuperator at the boiler connection.
3. Secure with the four nuts.
4. Re-connect the water connections to the upper and lower recuperator flanges.
5. Re-insert the in-line drain fitting into the recuperator vent adapter. Tighten the clamp to secure in place.
6. Re-connect the plug-in connector on the thermal fuse (Figure 98, page 93, item 27).

Figure 80 Recuperator flueway drain holes

Re-install the condensate trap and recuperator access cover

1. Replace the condensate trap and recuperator access cover — tighten bolts securely (do not exceed 18 inch-pounds, 2 N-m, torque).

WARNING If the recuperator shows signs of significant corrosion or deterioration, contact Williamson-Thermoflo for recommendations on investigating the cause and replacing the recuperator if necessary.

Make sure the recuperator access cover gasket is in good condition. Replace if necessary.

Make sure the recuperator access cover and the condensate trap are re-installed securely.

Failure to comply with the above could result in severe personal injury, death or substantial property damage.

Re-connect the vent pipe

1. If the vent pipe was lifted out, re-insert the vent pipe into.
2. If the vent pipe was cut, install a coupling in the vent line to allow re-connection.
3. If a section was removed (stainless vent pipe), replace the section.
4. Re-connect the vent pipe to the in-line drain fitting and tighten the clamp.

WARNING When replacing the vent pipe, follow all instructions in this manual to ensure the vent is properly completed. Failure to properly the vent pipe could result in severe personal injury, death or substantial property damage.

Troubleshooting

VERIFY PROPER OPERATION AFTER SERVICING.

WARNING Label all wires prior to disconnection when servicing controls. Wiring errors can cause improper and dangerous operation.

WARNING Never jumper (bypass) any device except for momentary testing as outlined in Troubleshooting charts. Severe personal injury, death or substantial property damage can result.

WARNING The IBC and boiler controls can malfunction if they get wet. Never try to use a control that has been flooded or wet. Replace it. Failure to comply can result in severe personal injury, death or substantial property damage.

WARNING The boiler contains ceramic fiber and fiberglass materials. Use care when handling these materials per instructions on page 103 of this manual. Failure to comply could result in severe personal injury.

Before troubleshooting

1. Have a voltmeter that can check 120 VAC, 24 VAC, 24 VDC and a continuity checker.
2. Check for 120 VAC (min. 102-max.132) to boiler.
3. Make sure thermostat is calling for heat and contacts (including appropriate zone controls) are closed. Check for 24 VAC between thermostat wire nuts and ground.
4. Have an inclined manometer with 0 – 2” w.c. range.

Check the following

1. Wire connectors to IBC are securely plugged in at IBC and originating control.
2. Hoses are properly and securely plugged in and are not damaged.

Checking the air pressure switch

WARNING Do not use manometer as shown in Figure 81 to test gas valve outlet pressure. Where instructed in this manual to check gas valve outlet pressure, follow instructions carefully, particularly regarding connection of manometer. Manometer fluid will cause permanent damage to gas valve. Severe personal injury, death or substantial property damage can result.

Check switch pressure setting

1. See Figure 81.
2. Remove both air pressure switch hoses from air pressure switch.
3. Install tees and tubing as shown in Figure 81 to inclined manometer.
4. Turn off gas valve and set thermostat to call for heat. Blower will run but burner will not ignite.
5. Check for 24 VAC between both air pressure switch terminals and ground.

Figure 81 Connecting a manometer to check air pressure switch. DO NOT use this arrangement to check gas valve

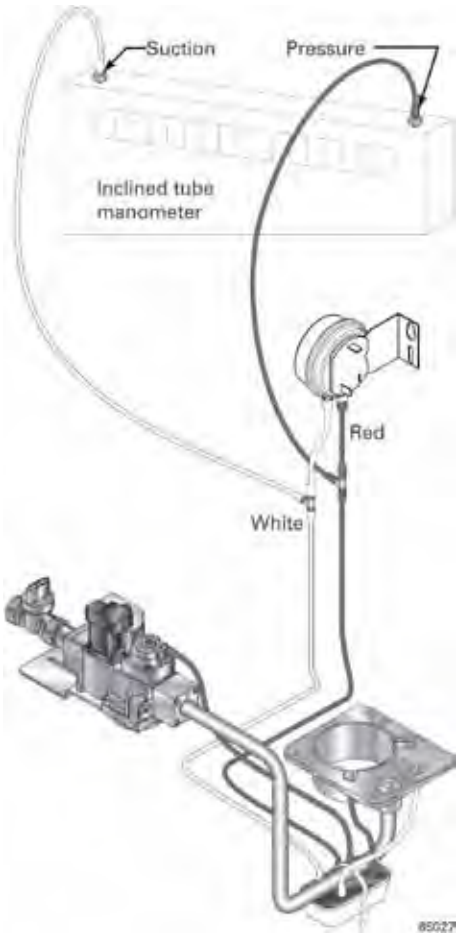

6. If manometer reading is at least 1.0” w.c., but there is not 24 VAC between both air pressure switch terminals and ground, replace air pressure switch.

Troubleshooting air pressure reading

1. If manometer reading is lower than 1.4” w.c. check for possible causes:
   - Blockage in hoses.
   - Loose blower wheel on motor shaft.
   - Blower motor not at proper rpm.
   - Blockage in air inlet or hose.
   - Blockage in flue pipe or termination.
   - Condensate trap filled w/condensate.

Return to normal operation

1. When pressure reading is proper and air pressure switch is operating properly, remove tees and reinstall hoses to air pressure switch.

Troubleshooting *(continued)*

Igniter

DANGER Wait several minutes until igniter cools down before attempting replacement. Failure to do so will cause severe personal injury.

1. Disconnect igniter (Figure 82) from igniter wiring harness and remove igniter before removing from blower assembly.
2. Replace igniter gasket if original gasket is frayed or damaged OR if room-temperature resistance across igniter is not between 40 and 95 ohms.
3. Igniter is fragile — handle with care. Do not touch igniter surface with bare hands. Body oils can cause failure of the carbide.

Figure 82 Igniter

Gas Valve

WARNING The gas valve (Figure 83) operates with a negative pressure at the outlet — approximately –0.2" w.c. — DO NOT set gas pressure higher than this.

Follow instructions in this manual carefully if testing gas valve outlet pressure. Failure to comply can result in severe personal injury or death.

WARNING The gas valve outlet is bolted to the gas line adapter and sealed with an o-ring. When replacing valve, replace only with valve listed in this manual for use with the GWC boiler. Failure to comply could result in severe personal injury, death or substantial property damage.

Figure 83 Gas valve

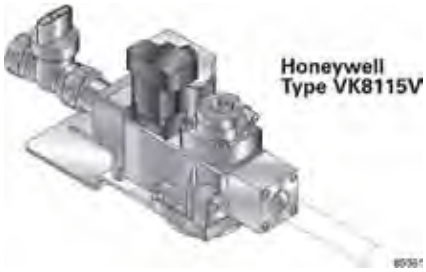

Blower Housing

WARNING **Do not disassemble blower housing (Figure 84)**. A fire or explosion causing severe personal injury, death or substantial property damage can result. If you suspect a problem, replace blower housing. Follow instructions on page 70 for blower housing removal and replacement.

Figure 84 Blower housing

Thermal fuse

1. The thermal fuse (Figure 85) protects vent pipe from excess flue temperatures.
2. If the thermal fuse opens, it must be replaced. See page 92 for replacement information.

WARNING If the thermal fuse opens, investigate the cause before replacing switch and starting the boiler. DO NOT attempt to jumper the switch. Failure to comply could result in severe personal injury, death or substantial property damage.

Figure 85 Thermal fuse

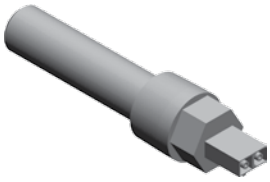

Return temperature sensor

1. See Figure 86.
2. Resistance check method:
   a. With the boiler operating, use a contact thermometer to measure the temperature of the return pipe next to the return temperature sensor. Make a note of the temperature.
   b. Turn the boiler ON/OFF switch off.

Figure 86 Return temperature sensor

Troubleshooting *(continued)*

c. Immediately disconnect the return temperature sensor plug from the IBC.
d. Measure the resistance of the sensor. Write down the result.
e. Let the sensor cool to room temperature and measure the resistance again. Write down the result.
f. Compare the sensor resistances at both temperatures to the closest temperatures in Figure 87.
g. If the measured values are within 10% of the values listed, the sensor is good. If not, replace the sensor. See Replacement parts for the part number.

3. Fixed resistor method
   a. With the boiler power OFF, disconnect the return temperature sensor plug at the IBC.
   b. Insert a 2500-ohm resistor into the IBC sensor plug.
   c. Restart the boiler.
   d. If the boiler operates with the resistor, but not with the sensor, try replacing the sensor. See Replacement parts for the part number.

IBC (integrated boiler control)

Make sure **ground wiring** is installed per wiring diagram. Good grounding is extremely important for proper operation.

⚠WARNING **Solder or water** splatter between plugs and circuit board can cause improper operation of IBC. Place a shield over the boiler internal controls and components during installation. Failure to comply could result in severe personal injury, death or substantial property damage.

IBC indicator lights — lockout modes

- See Charts 1 through 8 in this section for detailed trouble-shooting procedures.
- To reset control after a lockout, turn off power at the 120 VAC service switch or turn down all thermostats. Wait 45 seconds. Then restore power and call for heat.
- After an over-temperature lockout (POWER and LIMIT lights flashing), the control will only reset after interruption of 120 VAC for 45 seconds. (And temperature at return water temperature sensor must be below 240°F.)

POWER light flashing alone

- Usually indicates reversed polarity of 120 VAC power wires.

POWER and TSTAT CIRC lights flashing

- Usually indicates stray voltage on external thermostat circuit wires or return water temperature entering boiler sections has not reached 140°F within 20 minutes.

POWER and LIMIT light flashing alternately

- Usually indicates that limit circuit failed to cut off boiler at high temperature — return water temperature sensor has sensed water over 235°F.

POWER and PRESS SWITCH lights flashing

- Usually indicates pressure switch is closed when it should not be, or pressure switch failed to close within 5 minutes of blower starting.

Figure 87 Return temperature sensor resistance

Temperature °F	Resistance Ohms	Temperature °F	Resistance Ohms
60	15300	140	2480
70	11900	160	1680
80	9310	180	1160
100	5840	200	810
120	3760	212	674

Figure 88 GWC Integrated Boiler Control (IBC)

POWER and FLAME lights flashing

- Usually indicates control has had three unsuccessful ignition attempts or sensed flame when it shouldn't be there. Boiler may not be properly grounded.

IBC indicator lights — non-lockout modes

TSTAT CIRC light flashing alone

- Usually indicates return water temperature sensor detects water at boiler return pipe less than 40°F. Both internal circulators will run continuously, even with no call for heat, until temperature rises.

LIMIT light flashing alone

- Usually indicates an open or shorted return water temperature sensor.

Troubleshooting the IBC

- See Figure 89, page 76 for location of harness plug receptacles and plugs on the IBC.

Troubleshooting *(continued)*

Figure 89 IBC harness plug receptacle and indicator light locations

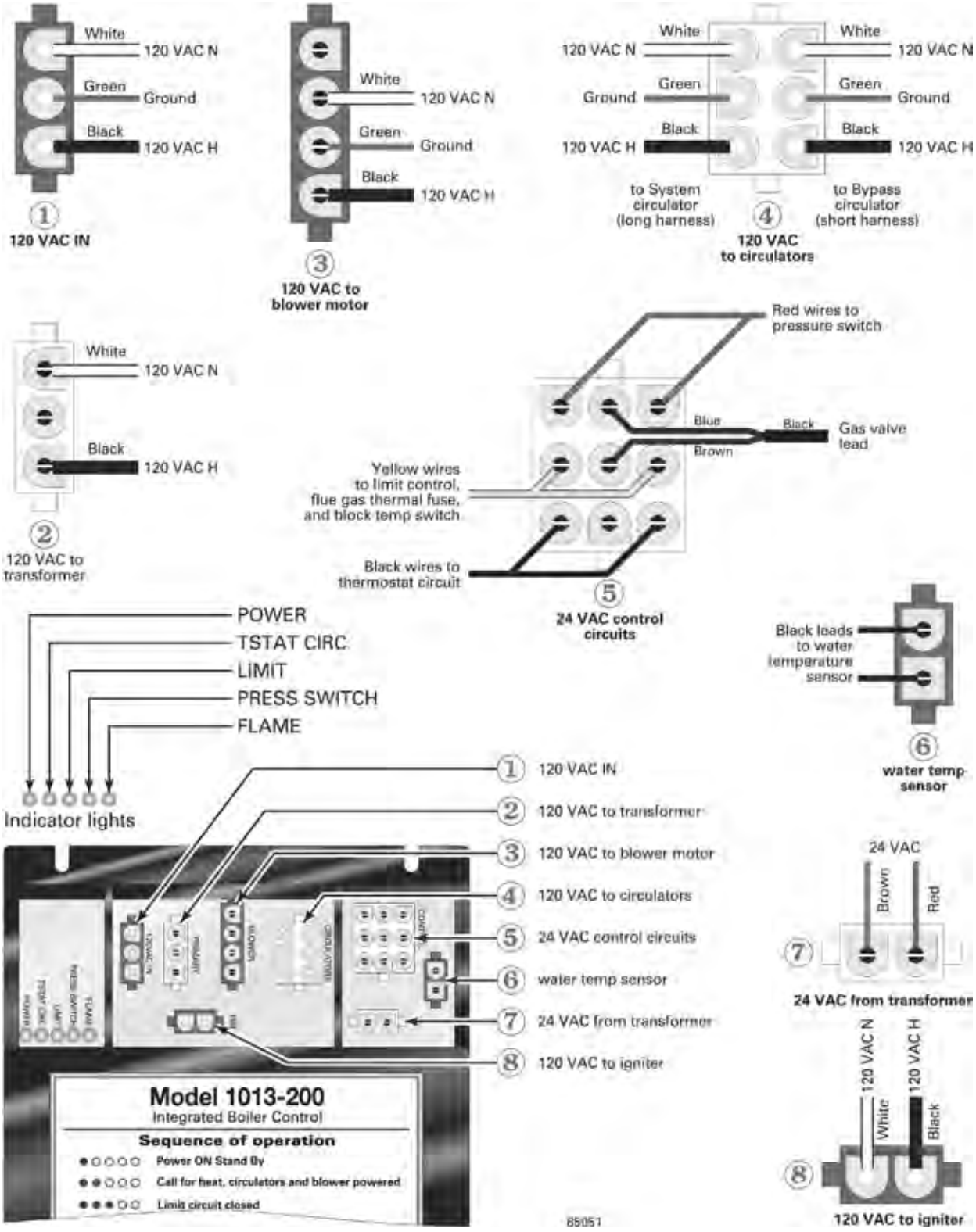

Troubleshooting *(continued)*

Figure 90 Common causes and possible corrections, part 1

Symptom	Common Causes	Possible Corrections
Rapid cycling — boiler turns on and off frequently	Thermostat installed where drafts or heat affect reading	Locate thermostat on inner wall away from heat sources or cool drafts.
	Heat anticipator in thermostat adjusted incorrectly	Adjust thermostat per manufacturer's instructions.
	Incorrect limit setting	Set limit according to system needs. Maximum setting is 200°F. Increase limit setting to decrease cycling.
	Insufficient water flow through boiler	Check all valves to and from boiler. Return to proper setting.
		Confirm circulator size.
Frequent release of water through relief valve	Expansion tank sized too small	Call qualified service technician to check expansion tank operation and size.
	Flooded expansion tank	Call qualified service technician to check expansion tank operation.
	Inoperative limit control	Call qualified service technician to replace limit control.
Need to frequently add makeup water	Leaks in boiler or piping	Have qualified service technician repair leaks at once to avoid constant use of makeup water. Makeup water can cause mineral deposits which, in turn, can cause boiler section failure. Do not use petroleum-base stop-leak compounds.
Black water condition	Oxygen corrosion due to leaks in boiler and piping	Have qualified service technician repair at once. Keep pH of water between 7.0 to 8.5.

Troubleshooting *(continued)*

Figure 91 Common causes and possible corrections, part 2

Symptom	Common Causes	Possible Corrections
Popping or percolating noise heard in boiler	Mineral deposits in sections due to constant use of makeup water	Call qualified service technician to de-lime boiler, if necessary. In some cases, deposits will be too heavy to remove with de-liming procedures.
		Have qualified service technician repair leaks to eliminate need for constant makeup water.
	Incorrect pH of boiler water	Call qualified service technician to check pH level and correct. pH should be maintained between 7.0 to 8.5.
	Insufficient water flow through boiler	Check all valves to and from boiler. Return to proper setting.
		Confirm circulator size.
Metal flakes found in vent outlet or recuperator — flueway corrosion	Contaminated combustion air supply — See manual page 13.	Remove any contaminating products, see manual page 13.
		Provide outside air for combustion. Have qualified service technician pipe-up kit.
	Condensation of combustion gases in boiler sections	Have qualified service technician check operation of mixing system. Repair/replace if necessary.
Some radiators or baseboard units do not heat or are noisy	Air in system	Bleed air from system through air vents in radiators or baseboard units.
	Low system pressure	Fill to correct pressure.
		Check for leaks in boiler or piping. Have qualified service technician repair at once.
	High limit set too low	Adjust high limit to higher setting.

Troubleshooting *(continued)*

CHART 1 — Troubleshooting POWER light status

WARNING **Electrical shock hazard** — Wherever you see TURN OFF POWER, follow the instructions. Failure to follow instructions could result in severe personal injury, death or substantial property damage.

Is **POWER** *light off?*

- No → *Is* **POWER** *light . . .*
- Yes → *Is* **POWER** *light . . .*

Is **POWER** *light . . .*

Flashing alone?	Flashing with another light?	On steady (NOT flashing)?
TSTAT CIRC light flashing	**CHART 2**, page 80	
LIMIT light flashing	**CHART 3**, page 81	
PRESS SWITCH light flashing	**CHART 4**, page 82	**CHART 6**, page 84
FLAME light flashing	**CHART 5**, page 83	**CHART 7**, page 85
NO LIGHT IS FLASHING, but there is insufficient heat		**CHART 8**, page 86

- Usually indicates polarity on incoming **120 VAC** power line is wrong.
- **TURN OFF POWER** at service switch or breaker, then reverse the HOT and NEUTRAL wires entering the boiler in the J-box.
- Restore **POWER** at service switch or breaker.

Is **POWER** *light flashing now?*

- No → Boiler should now operate normally.
- Yes → Have system checked by a licensed electrician.

  If problem persists, call your local Williamson-Thermoflo sales representative.

- Make sure service switch or circuit breaker is on or fuses are good.
- Remove **120 VAC IN** plug (Figure 89, page 76, Item 1) on IBC.
- Using voltmeter, check across top and bottom pins of **120 VAC IN** receptacle.

Does voltmeter indicate **120 VAC***?*

- No → Problem is with incoming electricity. Have licensed electrician repair circuit.
- Yes →

- Reconnect **120 VAC IN** plug.
- Remove **120 VAC** transformer **PRIMARY** plug (Figure 89, page 76, Item 2) on IBC.
- Using voltmeter, check across top and bottom pins of **PRIMARY** receptacle.

Does voltmeter indicate **120 VAC***?*

- No → Replace IBC. Retest
- Yes →

- Reinstall **120 VAC** transformer **PRIMARY** plug.
- Remove **24 VAC** transformer plug (Figure 89, page 76, Item 7) on IBC.
- Using voltmeter, check across pins of receptacle.

Does voltmeter indicate **24 VAC***?*

- No → Replace transformer. Retest.
- Yes → Replace IBC. Retest.

Troubleshooting *(continued)*

CHART 2 — TSTAT CIRC & POWER lights flashing

WARNING **Electrical shock hazard** — Wherever you see TURN OFF POWER, follow the instructions. Failure to follow instructions could result in severe personal injury, death or substantial property damage.

Is return water temperature sensor clamped securely to the return pipe in the boiler?

- **No** →
  - Attach sensor to pipe with clamp provided.
  - Follow return temperature sensor checking procedure on page 74. Replace sensor if necessary.
  - Retest.
- **Yes** ↓

- Check for stray voltage on the incoming thermostat wires. Disconnect the two external wires connected to the boiler thermostat wires.
- Connect a voltmeter across the two incoming wires. Close each thermostat, zone valve and relay in the external circuit one at a time and check the voltmeter reading across the wires. There should NEVER be a voltage reading. If a voltage does occur under any condition, check and correct the external wiring. (This is a common problem when using 3-wire zone valves.)
- Once the external thermostat circuit wiring is checked and corrected if necessary, reconnect the external thermostat circuit wires to the boiler thermostat wires and allow the boiler to cycle.

Did you find and correct a voltage across the two external thermostat circuit wires?

- **Yes** ↓
  - Boiler should now operate per the normal sequence of operation (Figure 71, page 63) if wiring was corrected.
- **No** ↓

Is boiler internal Bypass circulator operating?

- **No** →
  - Remove **CIRCULATORS** plug (Figure 89, page 76, Item 4) from plug receptacle of IBC.
  - Place voltmeter leads across the right-side **120 VAC N** and **120 VAC H** pins of the **CIRCULATORS** receptacle.

  Does the voltmeter indicate 120 VAC?

  - **No** ↓
    - Replace IBC.
    - Retest.
  - **Yes** ↓
    - Test wire continuity of circulator wire harness.

    Is harness ok?

    - **No** →
      - Replace circulator harness.
      - Retest.
    - **Yes** ↓
      - Reconnect circulator harness to IBC.
      - Attempt to get the circulator started by giving it a sharp rap on the end of the circulator motor (to release a possibly locked impeller).
      - If the circulator begins to operate, allow it to operate for a few minutes to see if the problem clears.
      - If problem persists, replace the Bypass circulator.
      - Retest.
- **Yes** ↓
  - Check the boiler internal return pipe where it enters the boiler sections. The **TSTAT CIRC** and **POWER** lights will flash as long as the return water temperature is less than 130 °F.
  - Wait up to 20 minutes to give the boiler and system a chance to respond.

  Does problem persist?

  - **No** ↓
    - Boiler may now be operating normally. Verify against normal sequence of operation (Figure 71, page 63).
  - **Yes** ↓
    - If boiler appears not to be heating, troubleshoot boiler per **CHART 8**, page 86. If problem cannot be resolved, replace water temperature sensor and retest. Then replace IBC (IBC) if sensor does not correct the problem.
    - If boiler is heating, but the temperature at the return pipe does not increase above 130 °F, there may be an incorrectly-piped external circulator forcing water through the boiler. Check external piping and correct.

Troubleshooting *(continued)*

CHART 3 — LIMIT & POWER lights flashing

WARNING **Electrical shock hazard** — Wherever you see TURN OFF POWER, follow the instructions. Failure to follow instructions could result in severe personal injury, death or substantial property damage.

- This is a **LOCKOUT** condition. The return water temperature sensor has signaled a temperature higher than 240 °F, but the boiler limit circuit is closed (indicating that the limit control circuit did not catch the over-temperature condition). This is probably an indication of a failure of the boiler limit control and possibly the block temperature switch as well.

- **TURN OFF POWER** to boiler at 120 VAC service switch.
- Remove **CONTROL CIRCUIT** plug from IBC receptacle (Figure 89, page 76, Item 5).
- Remove a wire from one of the limit control spade connectors.
- Connect an ohmmeter across the left and right pins on the center row of the limit circuit harness.

Does the ohmmeter indicate a shorted wire harness (zero ohms)?

Yes

- Replace control wiring harness.
- Retest.

No

- Reconnect **CONTROL CIRCUIT** plug to IBC.
- Remove **WATER TEMP SENSOR** plug from IBC receptacle (Figure 89, page 76, Item 6).
- Connect an ohmmeter across the plug pins to check the sensor resistance.

Does the ohmmeter indicate a shorted sensor (zero ohms)?

Yes

- Replace water temp sensor.
- Retest.

No

Is boiler hot?

Yes

- Close the external manual gas valve.
- Remove one wire from the limit control space connector.
- Set a thermostat to call for heat. Then turn on power to the boiler at the 120 VAC service switch.
- The boiler system circulator should come on and the IBC should try to cycle the boiler.
- Allow the boiler circulator to run to cool off boiler and system water.
- After the boiler and system water have cooled, turn off power at the 120 VAC service switch and open the external manual gas valve.

No

- Set limit control knob to its minimum setting. Replace wire to limit control spade connector.
- Set a thermostat to call for heat.
- Turn on power at 120 VAC service switch.
- IBC should cycle boiler on and begin heating.
- The limit control should shut off the gas valve when the temperature at the boiler pressure/temperature gauge has reached no more than about 20 °F higher than the limit switch setting.

Does limit control shut off gas correctly?

Yes

- Replace IBC.
- Retest.

No

- Replace limit control and block temperature switch.
- Retest.

Troubleshooting *(continued)*

CHART 4 — PRESS SWITCH & POWER lights flashing

WARNING **Electrical shock hazard** — Wherever you see TURN OFF POWER, follow the instructions. Failure to follow instructions could result in severe personal injury, death or substantial property damage.

- Reset boiler control by turning off power at service switch or turning down thermostat for at least 45 seconds.
- Thermostat should call for heat and appropriate zone valves open.

Does blower motor operate?

No

- Remove BLOWER plug (Figure 89, page 76, Item 3) from plug receptacle of IBC.
- Place voltmeter leads across the 120 VAC N and 120 VAC H pins of the BLOWER receptacle.

Does the voltmeter indicate 120 VAC?

No

- Remove one of the red wires connected to the pressure switch.
- Check continuity across the switch terminals.

Does the ohmmeter indicate the switch is closed?

No

- Replace IBC.
- Retest.

Yes

- Check air pressure switch per page 73.
- Replace if necessary.
- Retest.

Yes

- **TURN OFF POWER** at service switch.

Does blower wheel turn freely by hand?

No

- Properly position blower wheel on blower motor shaft and tighten set screw. (Or replace blower housing assembly.)
- Retest.

Yes

- Replace blower motor. (Also check blower housing assembly. Replace if necessary.)
- Retest.

Yes

Is blower wheel turning at speed of blower motor?

No

- **TURN OFF POWER** at service switch.
- Properly position blower wheel on blower motor shaft and tighten set screw. (Or replace blower housing assembly.)
- Retest.

Yes

- Wait 5 minutes.

Is purge light flashing?

No

- Boiler should be in normal operating sequence (Figure 71, page 63).
- Observe operation until thermostat is satisfied and blower has completed its post-purge cycle.

Yes

- Check condensate trap.

Is there condensate present?

No

Are vent or combustion air passages blocked?

No

- Clear passages and recycle boiler.
- Recheck boiler operation.

Yes

- Clear passages and recycle boiler.
- Recheck boiler operation.

Yes

- Drain condensate.
- Retest.

Troubleshooting *(continued)*

CHART 5 — FLAME & POWER lights flashing

WARNING **Electrical shock hazard** — Wherever you see TURN OFF POWER, follow the instructions. Failure to follow instructions could result in severe personal injury, death or substantial property damage.

Are manual main shutoff valve and gas valve turned on?

No

- Open manual gas valve.`
- Restart boiler, following Operating instructions on boiler (see Figure 72, page 64).
- Check for proper operation (per normal sequence of operation).

Yes

- Check gas valve harness wires and check for tight wiring connections on gas valve and IBC. Repair/replace as necessary.
- Recycle boiler by thermostat or service switch (holding power off for at least 45 seconds).
- Thermostat should call for heat and appropriate zone valves close.

During step 5 of normal sequence of operation (Figure 71, page 63), *is there* **24 VAC** *across gas valve terminals?*

No

- Replace IBC.
- Retest.

Yes

- Check and/or replace igniter.
- Recycle boiler by thermostat or service switch. Thermostat should call for heat and appropriate zone valves close.
- Wait 5 minutes.

Are **FLAME** *&* **POWER** *lights flashing?*

No

- Boiler should now operate normally.
- Original flashing **FLAME** light caused by igniter not operating properly.
- See normal sequence of operation (Figure 71, page 63).

Yes

- Check and/or replace gas valve.
- Recycle boiler by thermostat or service switch. Thermostat should call for heat and appropriate zone valves close.
- Wait 5 minutes.

Are **FLAME** *&* **POWER** *lights flashing?*

No

- Boiler should now operate normally.
- Original flashing **FLAME** light caused by gas valve not operating properly.
- See normal sequence of operation (Figure 71, page 63).

Yes

- Call your local Williamson-Thermoflo sales representative.

Troubleshooting *(continued)*

CHART 6 — TSTAT CIRC light flashing and POWER light on steady

WARNING **Electrical shock hazard** — Wherever you see TURN OFF POWER, follow the instructions. Failure to follow instructions could result in severe personal injury, death or substantial property damage.

- This is NOT a lockout mode.
- The IBC is signaling that the return water temperature sensor is detecting a temperature less than 40 °F.
- While the temperature at the boiler return water temperature sensor is less than 40 °F, both of the internal boiler circulators will run continuously, even if there is no call for heat (though the boiler will not fire until the thermostat calls for heat). This operation is intended to reduce chances of freezing during system down times by keeping water flowing.

Is return water temperature sensor clamped securely to the return pipe in the boiler?

- No →
  - Attach sensor to pipe with clamp provided.
  - If problem persists, replace return water temperature sensor.
  - Retest.
- Yes ↓

Are both boiler internal circulators operating?

- No →
  - Remove **CIRCULATORS** plug (Figure 89, page 76, Item 4) from plug receptacle of IBC.
  - Place voltmeter leads across the **120 VAC N** and **120 VAC H** pins of the **CIRCULATORS** receptacle on the side corresponding to the circulator not operating.

  Does the voltmeter indicate **120 VAC***?*
  - No →
    - Replace the IBC (IBC).
    - Retest.
  - Yes →
    - Test wire continuity of circulator wire harness.

    Is harness ok?
    - No →
      - Replace circulator harness.
      - Retest.
    - Yes →
      - Reconnect circulator harness to the IBC.
      - Attempt to get the circulator started by giving it a sharp rap on the end of the circulator motor (to release a possibly locked impeller).
      - If the circulator begins to operate, allow it to operate for a few minutes to see if the problem clears.
      - If problem persists, replace the bypass circulator.
      - Retest.
- Yes ↓

Is there a call for heat?

- Verify by removing thermostat wirings at boiler and checking continuity across external wires.

- No →
  - This is normal operation for water less than 40 °F at boiler internal return pipe.
  - Condition should change after a call for heat, when the boiler will heat up the water.
- Yes →
  - Wait 10 minutes to allow heat from the boiler to raise the water temperature.

  Does **LIMIT** *light quit flashing (and pipes begin to heat up)?*
  - No →
    - Boiler is not heating.
    - Troubleshoot boiler using **CHART 8**, page 86.
  - Yes →
    - Boiler should now operate normally.
    - Verify correct sequence of operation (Figure 71, page 63).

Troubleshooting *(continued)*

CHART 7	LIMIT light flashing and POWER light on steady

WARNING **Electrical shock hazard** — Wherever you see TURN OFF POWER, follow the instructions. Failure to follow instructions could result in severe personal injury, death or substantial property damage.

- This is NOT a lockout mode. The IBC should only be signaling that the water temperature sensor is either shorted or there is an open circuit across the sensor terminals.
- This situation is usually corrected by replacing the sensor, as described below.

- Remove **SENSOR** plug from receptacle on IBC (Figure 89, page 76, Item 6).
- Then re-insert.

Does **LIMIT** *light still flash?*

No	Yes

- Replace sensor and harness.

Does **LIMIT** *light still flash?*

No	Yes

- Boiler may now be operating correctly. Verify per normal sequence of operation (Figure 71, page 63).

- Replace IBC.
- Retest.

Troubleshooting *(continued)*

CHART 8 Insufficient heat or no heat to system (POWER light on steady)

WARNING **Electrical shock hazard** — Wherever you see TURN OFF POWER, follow the instructions. Failure to follow instructions could result in severe personal injury, death or substantial property damage.

- Has it been at least 5 minutes since setting thermostat to call for heat? If not, wait 5 minutes. Is system heating?
- Is thermostat set to call for heat? Remove thermostat wires at boiler and check continuity across the two wires. If circuit isn't closed, check external thermostat (zone valve, relay, etc.) wiring. Correct problems and retry.
- Reconnect external thermostat wiring at boiler.

Is thermostat circuit closed (continuity across wires)?

No → *Are all red lights off?*

- No → Wait 30 seconds. *Are all red lights off?*
  - No → Replace IBC. Retest.
  - Yes → Boiler is in standby. Set thermostat to call for heat and recheck operation. Verify sequence of operation, Figure 71, page 63.
- Yes → Boiler is in standby. Set thermostat to call for heat and recheck operation. Verify sequence of operation, Figure 71, page 63.

Yes → *Is boiler System circulator operating?*

- No → Remove system circulator harness plug from **CIRCULATORS** plug receptacle (long harness) (see Figure 89, page 76, Item 4). Check with voltmeter across left-side **120 VAC N** and **120 VAC H** pins of receptacle. *Does voltmeter show* **120 VAC** *across pins?*
  - No → Replace IBC. Retest.
  - Yes → Repair/replace circulator. Retest. Repair/replace wiring. Retest.
- Yes → Wait 5 minutes. *Is* **FLAME** *light on?*
  - No → Check block switch on top of boiler with continuity checker. *Are contacts closed?*
    - No → Wait for cast iron block to cool to room temperature. *Are block switch contacts closed?*
      - No → Replace switch. Retest.
      - Yes → Excessive block temperature has been reduced to safe operating level. Check for low water level or mineral deposits in sections. Correct before proceeding. Restart boiler and check sequence of operation (Figure 71, page 63).
    - Yes → Check across limit switch contacts with continuity checker. *Are contacts closed?*
      - Yes → Check across thermal fuse leads with continuity checker. *Is circuit closed?*
        - No → Replace thermal fuse. Retest.
        - Yes → Replace IBC. Retest.
      - No → Wait for boiler water to cool to temperature 20 to 30 °F lower than temperature set on limit switch. *Are limit switch contacts closed?*
        - No → Replace limit switch. Retest.
        - Yes → Boiler water temperature exceeded setting on limit switch with thermostat calling for heat. Boiler is OK. (See sequence of operation, Figure 71, page 63) Also check operation of setting on limit switch (should be above 140°F.).
  - Yes → If you have sufficient heat — boiler should follow normal operating sequence (Figure 71, page 63). If you have less than sufficient heat — *Is vent or combustion air piping free of blockage?*
    - No → Correct conditions and recheck operation. See sequence of operation, Figure 71, page 63.
    - Yes → Contact your Williamson-Thermoflo sales representative.

Replacement parts

Figure 92 Miscellaneous parts

Description	Model	Williamson-Thermoflo part number
Vent termination plate for 3" AL29-4C or 3" PVC pipes (plate includes knockouts to provide larger holes needed for PVC)	All	452-100-163WT
Vent Termination Bird Screen 3" PVC (1 pc)	All	383-500-105WT
Termination bag assembly (includes two 2-hole sidewall termination plates and two bird screens, mounting screws and plastic anchors)	All	542-200-314WT
3" PVC Concentric Vent Kit	All	383-500-350WT
Adapter 3-inch AL29-4C Vent Starter, FasNSeal	All	560-907-717WT
Adapter 3-inch AL29-4C Vent Starter, Z-Vent	All	560-907-723WT
Adapter 3-inch AL29-4C Vent Starter, Saf-T-Vent	All	560-907-724WT
Adapter 3-inch AL29-4C Vent Starter, CORR/GUARD	All	Contact Williamson-Thermoflo
Chemicals: Antifreeze, aluminum-safe, Sentinel X500 . . . . . . Corrosion inhibitor, Sentinel X100 . . . . . . (one tube is shipped with boiler) Sentinel X100 Inhibitor Test Kit. . . . . . (one kit is shipped with boiler) Cleaner, Sentinel X400.	All	 592-900-004WT 592-900-002WT 592-900-005WT 592-900-003WT
Condensate neutralizer kit	All	383-500-631WT

Replacement parts *(continued)*

Figure 93 Section assembly

Item number	Description	Model	Williamson-Thermoflo part number
1	Block assembly, includes: Front section, intermediate section, back section, square cut seals — 2”, silicone sealant, tie rods, tie rod nuts, tie rod washers, blower flange gasket, igniter, igniter gasket, screws, lock washers, studs, nuts	070 105 140 175	322-200-304WT 322-200-305WT 322-200-306WT 322-200-307WT
2	Front section replacement kit, includes front section, square cut seals (4), silicone sealant, blower flange gasket, igniter gasket, studs (13), nuts (13)	All	382-200-713WT
3	Intermediate section (also required Section replacement kit)	All	312-200-110WT
4	Back section (also required Section replacement kit)	All	312-200-130WT
Not shown	Section replacement kit	All	382-200-305WT
5	Tie rods	070 105 140 175	560-234-499WT 560-234-525WT 560-234-503WT 560-234-504WT
6	Base rail legs — (2) per boiler	070 and 105 140 and 175	452-100-173WT 452-100-174WT
7	Base rail brace — (2) per boiler	All	452-100-080WT
8	Blower housing support	All	452-100-111WT
9	Block temperature limit switch	All	382-200-375WT
10	Inspection port cover	All	In Insp. port kit
11	Inspection port gasket	All	590-317-628WT
—	Inspection port kit (includes cover and gasket)	All	542-200-181WT
12	Recuperator connection gasket	All	590-317-629WT
13	Stud, 5⁄16” – 18 x 1¼”	All	560-340-581WT
14	Hex nuts (4 each), 5⁄16” / lock washers (4 each), 5⁄16”	All	Obtain locally

Replacement parts *(continued)*

Figure 94 Section assembly

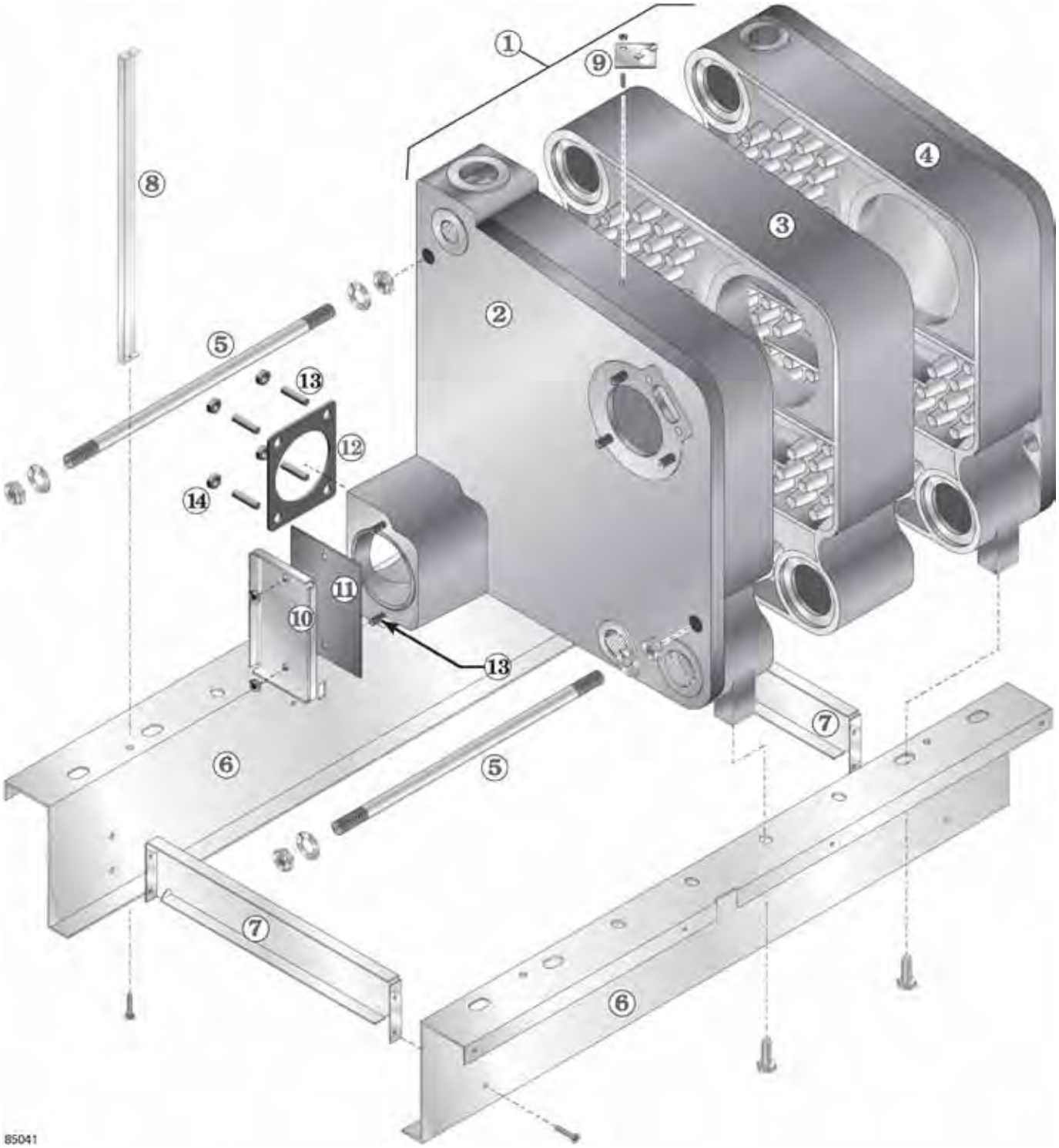

Replacement parts *(continued)*

Figure 95 Jacket assembly

Item number	Description	Model	Williamson-Thermoflo part number
1	Jacket panel, top	070 and 105 140 and 175	382-200-700WT 382-200-701WT
2	Jacket panel, front	All	382-200-702WT
3	Jacket panel, left side, front	070 and 105 140 and 175	382-200-703WT 382-200-704WT
4	Jacket panel, left side, rear	070 and 105 140 and 175	382-200-705WT 382-200-706WT
5	Jacket panel, right side	070 and 105 140 and 175	382-200-724WT 382-200-725WT
6	Jacket panel, rear	All	382-200-726WT
7	Jacket brace	All	422-200-179WT
8	Jacket panel, interior	All	382-200-727WT
9	Base rail assembly	All	see Figure 93, page 88 items 6 and 7
10	Screw, sheet metal type AB, serrated hex washer head Phillips #10 x ⅜” steel black phosphate	All	—

Replacement parts *(continued)*

Figure 96 Jacket assembly

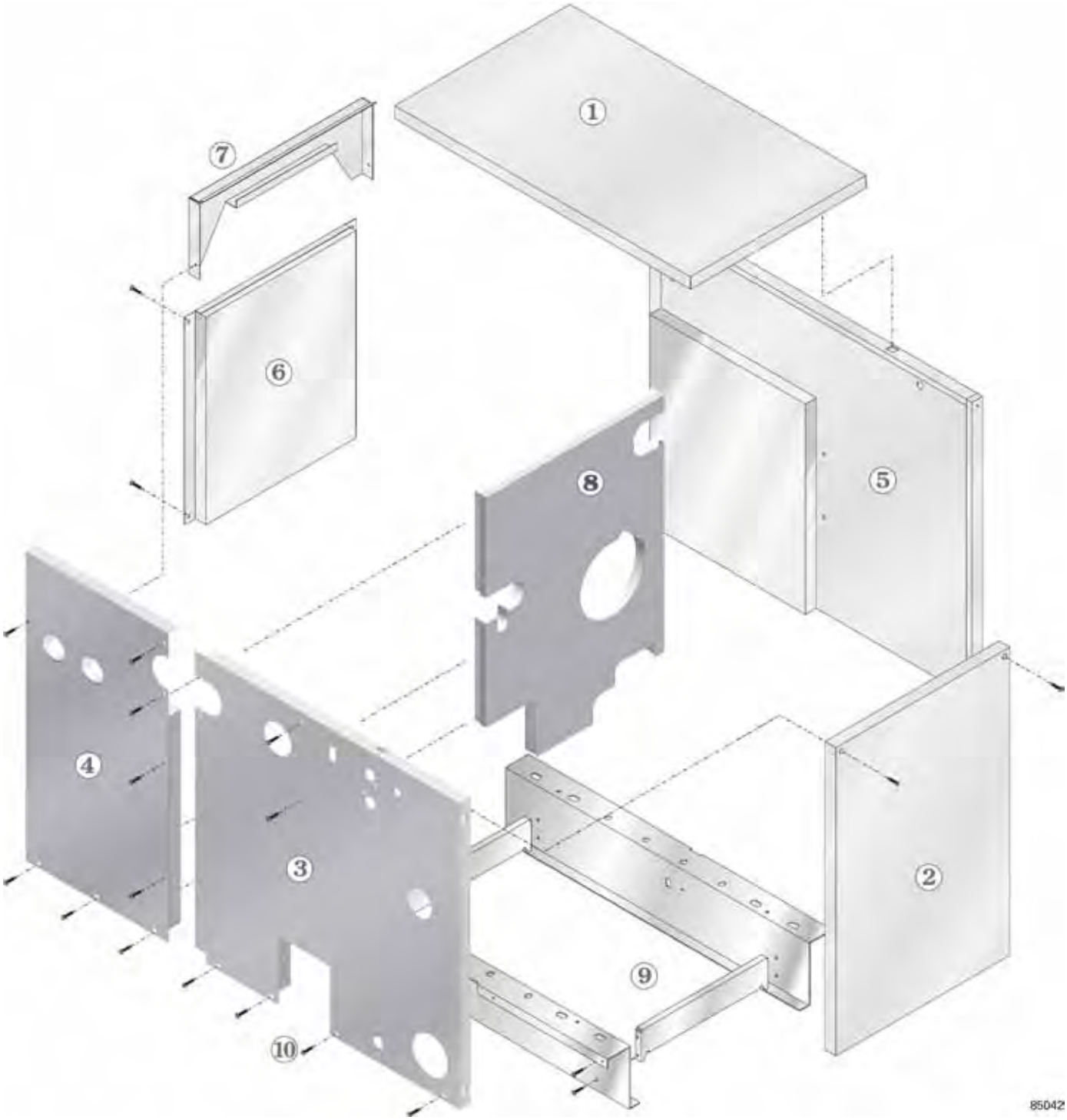

Replacement parts *(continued)*

Figure 97 Blower assembly

Item number	Description	Model	Williamson-Thermoflo part number
1	Burner replacement kit, includes burner, blower flange gasket, igniter, igniter screws, igniter washers, igniter gasket	070 105 140 175	382-200-320WT 382-200-325WT 382-200-330WT 382-200-335WT
2	Blower flange gasket	All	590-317-610WT
3	Air pressure switch (0 to 5,500 feet elevation)	All	382-200-723WT
—	Air pressure switch (5,500 to 10,000 feet elevation)	All	Consult W-T factory
4	Blower motor replacement kit, includes blower motor, motor mounting grommets, screws, lock nuts and 9" Allen wrench	All	382-200-345WT
5	Blower housing assembly replacement kit, includes: blower housing, obsv. port, blower housing cover plate, blower motor mounting brackets, washer hold down bracket, lock nuts, motor mount grommets, blower motor, blower wheel, magnetic washer, silicone sealant, screws, blower flange gasket, igniter, igniter washers, igniter screws, igniter gasket	All	382-200-340WT
6	Conversion kit, ***natural to propane***, includes . . . . . Propane orifice plate, label	070 105 140 175	510-811-926WT 510-811-927WT 510-811-928WT 510-811-929WT
	Orifice plate, ***natural gas***	070 105 140 175	510-811-934WT 510-811-935WT 510-811-936WT 510-811-937WT
7	Gas/air manifold assembly, includes gas/air manifold, gas tubing, washers, screws, gas valve o-ring	All	382-200-362WT
8	Sense line condensate trap, includes sense line condensate trap and hoses	All	382-200-409WT
10	Gas valve kit, complete, includes gas valve, gas cock, 1/2" nipple, bracket, o-ring, screws	All	382-200-411WT
12	Igniter replacement kit, includes igniter and gasket	All	511-330-148WT
13	Igniter gasket	All	590-317-599WT
14	Inlet air tube w/grill	All	382-200-310WT
15	Hose clamp, 3”	All	591-850-068WT
16	Inlet air hose, 3" by 19" long	All	562-302-573WT
17 & 18	Inspection port cover and Inspection port gasket	All	see Figure 93, page 88 items 10 and 11
19	Recuperator connection gasket	All	see item 24
20	Condensate drain hose clamp	All	—
21	Condensate trap	All	560-907-716WT
22	½” PVC condensate tee	All	—
23	Condensate tee U-clamp	All	—
24	Recuperator kit, includes recuperator, recuperator connection gasket, diamond flange gasket (2), connection hardware (4-nuts), flue gas thermal fuse	070 and 105 140 and 175	382-200-714WT 382-200-715WT
25	Diamond flange, 1” npt	All	see item 24
26	Diamond flange gasket	All	590-317-535WT
27	Flue gas thermal fuse	All	511-724-295WT
28	In-line flue adapter with drain kit, includes in-line flue adapter with drain and drain hose (6 inches)	All	382-200-716WT
29	Flue drain hose kit, 6 inches	All	382-200-717WT
30	Recuperator cover plate	070 and 105 140 and 175	593-000-002WT 593-000-003WT
31	Recuperator cover plate gasket	070 and 105 140 and 175	593-000-004WT 593-000-005WT
32	Recuperator vent pipe seal	All	593-000-006WT

Replacement parts *(continued)*

Figure 98 Blower assembly

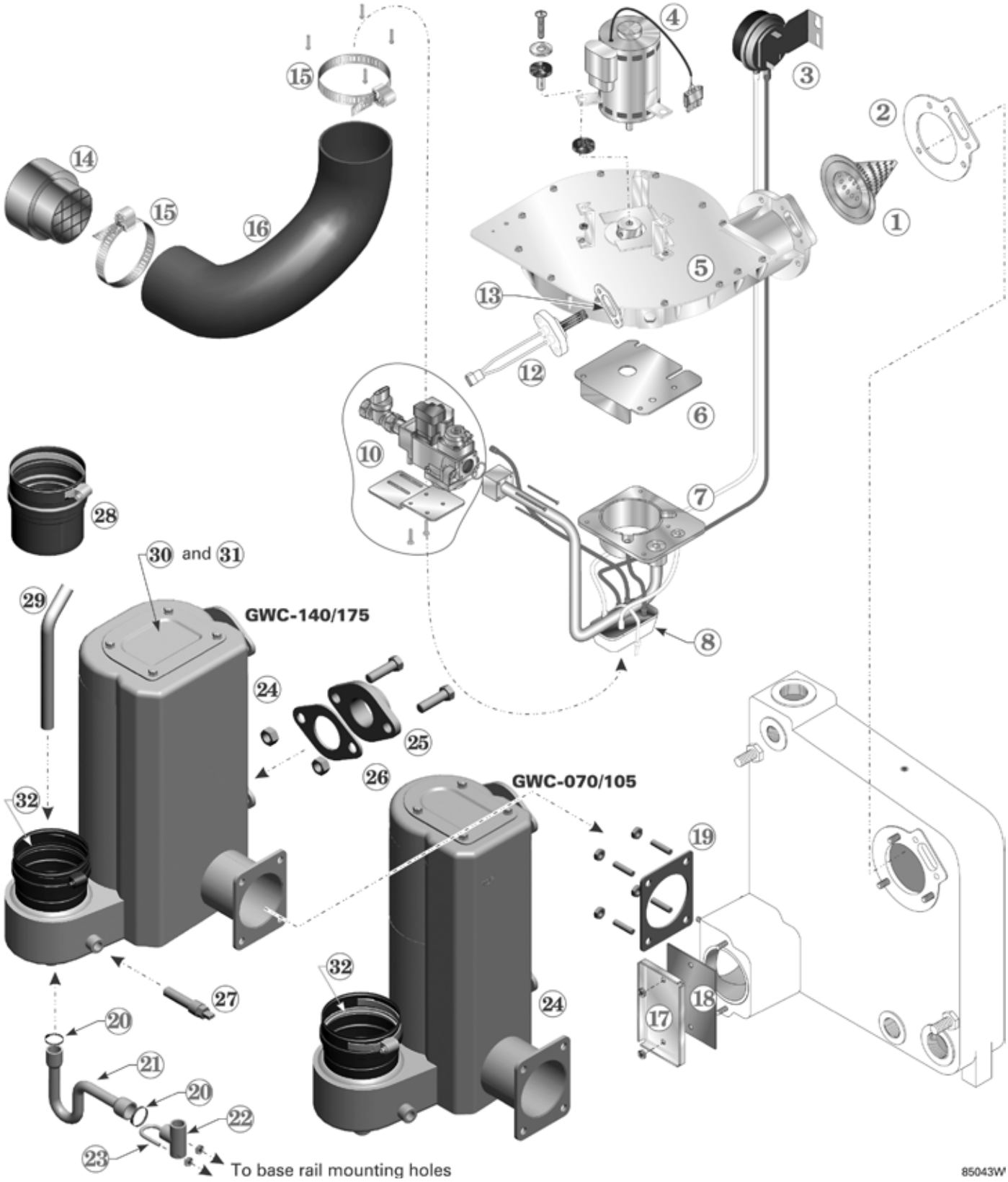

Replacement parts *(continued)*

Figure 99 Trim assembly

Item number	Description	Williamson-Thermoflo part number
1	System circulator, Taco 007	511-405-113WT
2	Bypass circulator, Taco 007	511-405-113WT
3	Circulator gasket, Taco 110-339	590-317-543WT
4	Manifold, casting/circulator kit, includes water manifold, circulator gasket (Taco 110-339) (2), square cut seal (manifold to casting)	382-200-720WT
5	Return manifold, recuperator/circulator kit, includes water manifold, circulator gasket (Taco 110-339) (1), diamond gasket	382-200-721WT
6	Square cut seal gaskets, casting, 2.31"	572-800-011WT
7	Diamond flange gasket	590-317-535WT
8	Supply manifold kit, includes water manifold, circulator gasket (Taco 110-339) (1), square cut seal (manifold to casting)	382-200-722WT
9	Coin-operated air vent, 1/8” NPT	570-148-565WT
10	Wiring harness, circulators to IBC	591-391-824WT
11	Return water temperature sensor and clip	511-330-089WT
12	Tee, 1” x 1” x ¾”	Obtain locally
13	Bushing ¾” x ¼”	Obtain locally
14	Temperature and Pressure Gauge, 1/4" NPT	380-000-000
15	30 PSIG Relief Valve	511-546-920WT
16	Nipple, NPT — ¾” x 3”	Obtain locally
17	Block temperature limit switch	382-200-375WT
18	Limit control without well, 200 °F maximum setpoint	382-200-719WT
19	Limit control well, ½” NPT	592-300-017WT
20	Drain valve, ¾” NPT	511-546-392WT

Replacement parts *(continued)*

Figure 100 Trim assembly

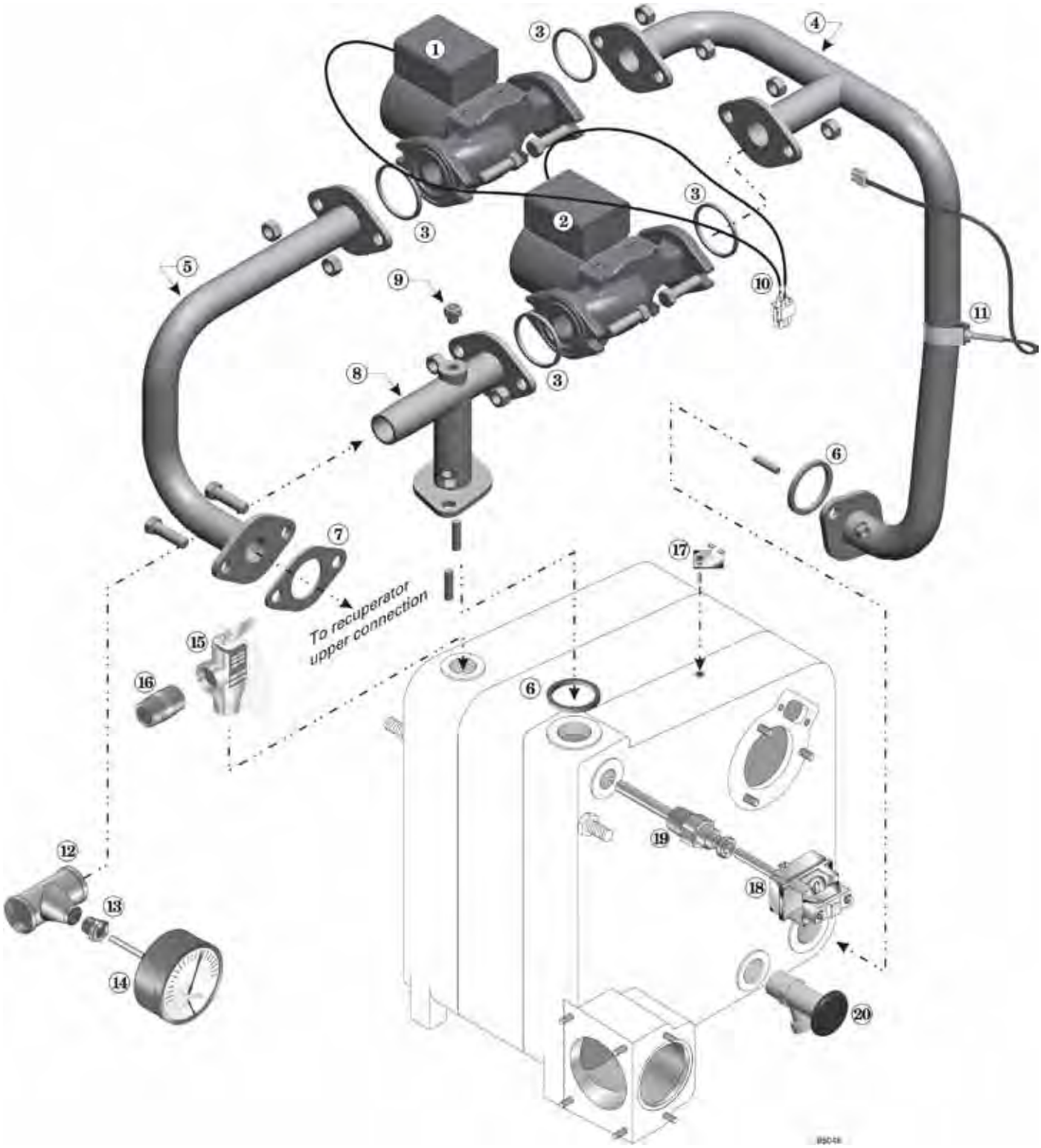

Replacement parts *(continued)*

Figure 101 Interior panel

Item number	Description	Williamson-Thermoflo part number
1	Interior panel	see Figure 95, page 90, item 8
2	Integrated boiler control assembly, includes IBC and screws	382-200-448WT
3	Transformer	511-842-370WT
4	Air pressure switch	see Figure 97, page 92 item 3
5	Wiring harness, IBC to junction box (not shown)	591-391-963WT
6	Wiring harness, IBC to hot surface ignitor (not shown)	591-391-819WT
7	Wiring harness, IBC to system and bypass circulators (not shown)	591-391-824WT
8	Wiring harness, IBC to controls (not shown)	591-391-964WT

Replacement parts *(continued)*

Figure 102 Interior panel

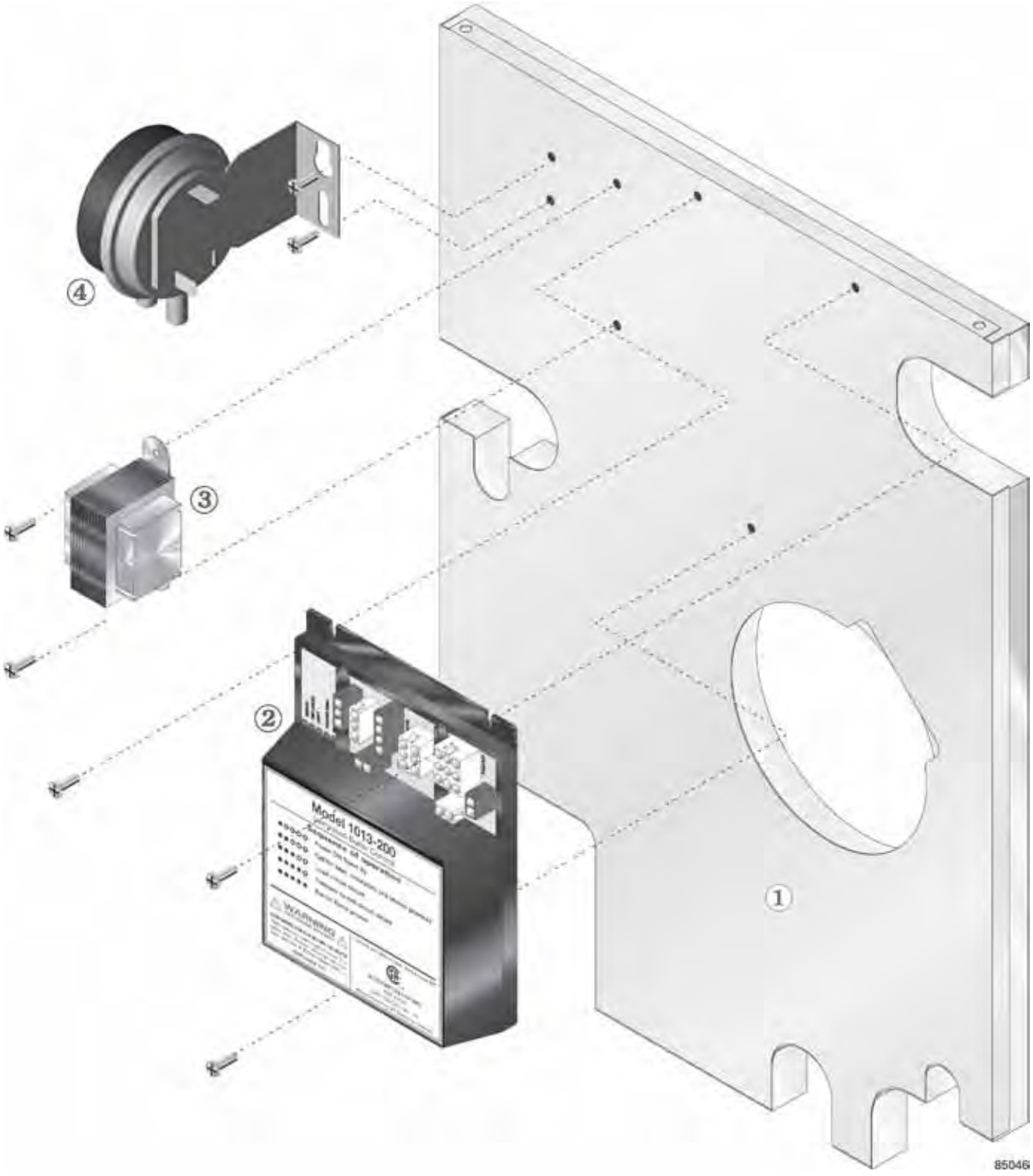

Dimensions and ratings

Figure 103 Dimension drawing (see Figure 104, page 99 for dimensional table)

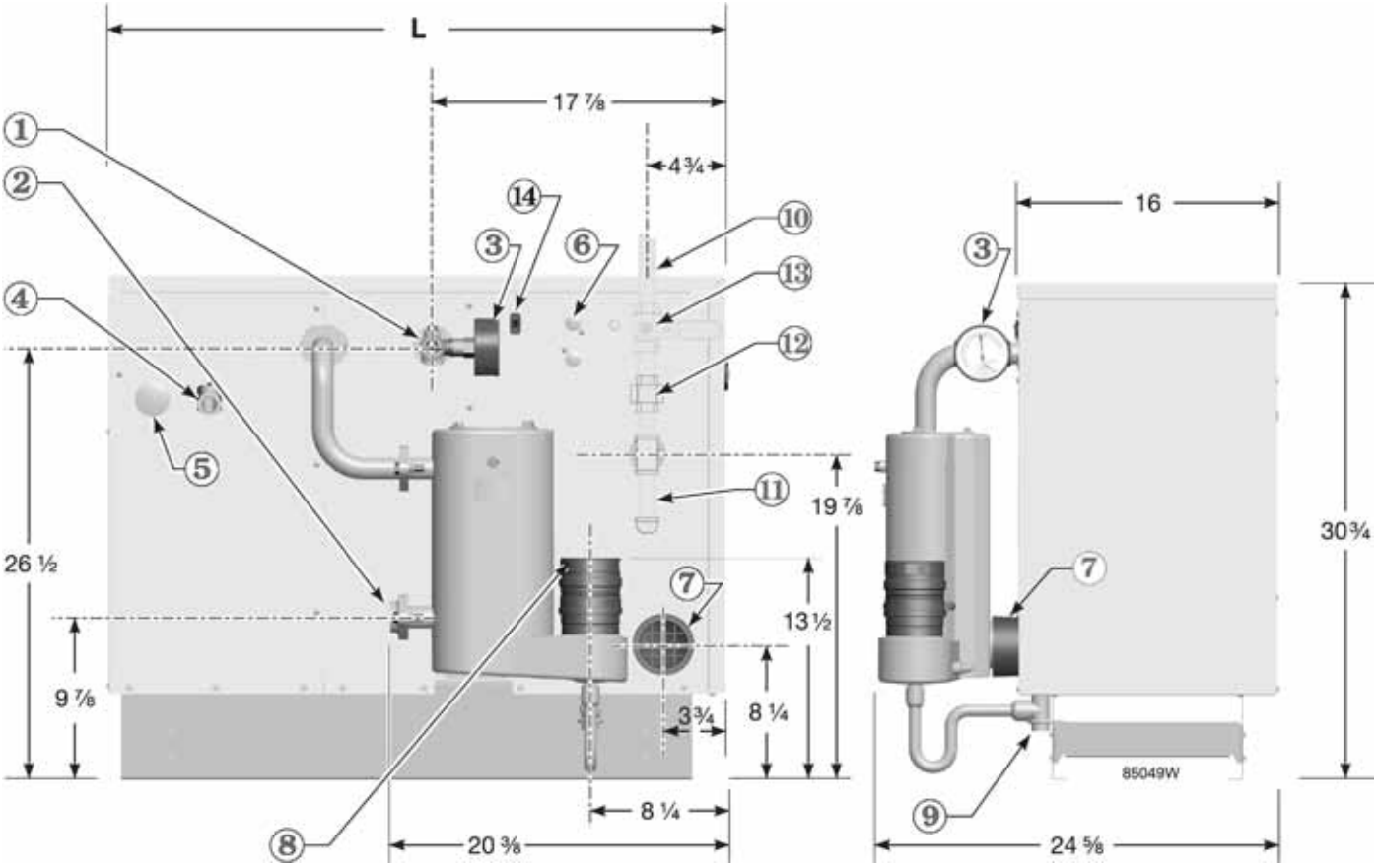

Item number	Description
1	1” NPT Supply
2	1” NPT Return
3	Combination pressure-temperature gauge, 2 ½” short shank
4	¾” NPT Relief valve outlet
5	Plug dome, 2” black
6	Junction box
7	Inlet air fitting, 3" PVC
8	Flue outlet, 3" PVC
9	½” Condensate drain
10	½” NPT Gas supply connection (provided by others)
11	Drip leg (provided by others)
12	Union (provided by others)
13	Manual main shutoff gas valve (provided by others)
14	ON/OFF switch

Dimensions and ratings *(continued)*

Figure 104 Boiler dimensional and physical data (see Figure 103, page 98)

Boiler model	Supply	Return	Length L	Gas connection size (Note 1)	Electrical service required (includes the internal circulators)	Boiler water content	Approx. shipping weight
	(inches NPT male)	(inches NPT female)	(inches)	(inches NPT female)	(amperes)	(gallons)	(pounds)
GWC-070	1	1	30¾	½	15	3.8	313
GWC-105	1	1	30¾	½	15	4.7	353
GWC-140	1	1	37¾	½	15	6.0	423
GWC-175	1	1	37¾	½	15	6.9	464

Note 1: Gas piping from meter to boiler to be sized per local utility requirements.

Figure 105 Boiler ratings

Boiler model	CSA Input	DOE Heating capacity (Note 1)	Net I=B=R water rating (Note 2)	AFUE (Note 1)	Vent/ combustion air diameter	Boiler water content	% Input derate vs vent length *(Values shown are at maximum vent/air pipe length)* (Note 3)			
							Direct Exhaust Venting		Direct Vent Venting	
	MBH	MBH	MBH	%	Inches	Gallons	Natural gas	Propane	Natural gas	Propane
GWC-070	**70**	**65**	**56**	**91.9**	3" PVC	3.8	up to 0.7%	up to 1.4%	up to 1.5%	up to 2.8%
GWC-105	**105**	**97**	**84**	**91.2**	3" PVC	4.7	up to 1.0%	up to 2.2%	up to 4.0%	up to 5.4%
GWC-140	**140**	**130**	**113**	**91.4**	3" PVC	6.0	up to 4.0%	up to 4.0%	up to 7.0%	up to 8.0%
GWC-175	**175**	**161**	**140**	**91.0**	3" PVC	6.9	up to 4.0%	up to 4.5%	up to 7.0%	up to 10.0%

Notes:

1. Based on standard test procedures prescribed by the United States Department of Energy. Ratings also referred to as CSA Output. NOTE that only ***DOE Heating Capacity*** and ***AFUE*** are certified by AHRI. AFUE is also know as Annual Fuel Utilization Efficiency or Seasonal Efficiency.
2. Net I=B=R ratings are based on net installed radiation of sufficient quantity for the requirements of the building and nothing need be added for normal piping and pickup. Ratings are based on a piping and pickup allowance of 1.15 and are determined under the provisions governing forced draft boiler-burner units. An additional allowance should be made for unusual piping and pickup loads.
3. All of the boilers will automatically de-rate as vent length increases, due to the pressure loss through the vent. For vent/air pipe lengths less than the maximum, the derate equals the value above times vent length ÷ 100.
4. Boilers are tested for 50 PSIG working pressure.
5. GWC boilers are not available for millivolt systems.

Dimensions and ratings *(continued)*

Figure 106 Multiple GWC boilers — ratings and engineering data — maintain the clearances shown on pages 6 and 7 — see Figure 28, page 23 and Figure 29, page 23 for layout options

Boilers in system Model GWC				Total CSA input	DOE Heating capacity	Boiler H.P.	Net water ratings	Manifolded combustion air duct size
				Input, MBH	Output, MBH	-	MBH	Square inches
070	**105**	**140**	**175**	-	Note 1	-	Note 2	Note 3 Figure 37, page 31
2				140	130	3.9	112	70
	2			210	194	5.8	168	105
		2		280	260	7.8	226	140
			2	350	322	9.6	280	175
3				210	195	5.8	168	105
	3			315	291	8.7	252	158
		3		420	390	11.7	339	210
			3	525	483	14.4	420	263
4				280	260	7.8	224	140
	4			420	388	11.6	336	210
		4		560	520	15.5	452	280
			4	700	644	19.2	560	350
5				350	325	9.7	280	175
	5			525	485	14.5	420	263
		5		700	650	19.4	565	350
			5	875	805	24	700	438
6				420	390	11.7	336	210
	6			630	582	17.4	504	315
		6		840	780	23.3	678	420
			6	1050	966	28.9	840	525
7				490	455	13.6	392	245
	7			735	679	20.3	588	368
		7		980	910	27.2	791	490
			7	1225	1127	33.7	980	613
8				560	520	15.5	448	280
	8			840	776	23.2	672	420
		8		1120	1040	31.1	904	560
			8	1400	1288	38.5	1120	700

Note 1	Based on standard test procedures outlined by DOE for individual boilers.
Note 2	Net I=B=R ratings are based on piping and pickup allowance of 1.15. Consult Williamson-Thermoflo for other allowances.
Note 3	All GWC installations require a separate vent pipe and termination for each boiler. **Vent piping cannot be manifolded**. Install and terminate vents as described in vent/air installation instructions in this manual. Combustion air piping can be individually piped or manifolded. See Figure 37, page 31, for manifolded air piping.

Dimensions and ratings *(continued)*

Figure 107 Engineering data — see page 99 for additional technical information

Boiler Model	Water flow rate per boiler		Vent/air pipe size — Provide a separate vent for each boiler Note 1
	GPM @ 20°F rise	GPM @ 40°F rise	
GWC-070	6.5	3.3	3”
GWC-105	9.7	4.9	3”
GWC-140	13.0	6.5	3”
GWC-175	16.1	8.1	3”

Note 1	All GWC installations require a separate vent pipe and termination for each boiler. **Vent piping cannot be manifolded**. Install and terminate vents as described in vent/air installation instructions in this manual. Combustion air piping can be individually piped or manifolded. See Figure 37, page 31, for manifolded air piping.

NOTES

Handling ceramic fiber and fiberglass materials

HANDLING CERAMIC FIBER MATERIALS

WARNING Ceramic fibers can be converted to cristobalite in very high temperature applications. The International Agency for Research on Cancer (IARC) has concluded, "Crystalline silica inhaled in the form of quartz or cristobalite from occupational sources is carcinogenic to humans (Group 1).":

- ❑ Avoid breathing dust and contact with skin and eyes.
  - Use NIOSH certified dust respirator (N95). This type of respirator is based on the OSHA requirements for cristobalite at the time this document was written. Other types of respirators may be needed depending on the job site conditions. Current NIOSH recommendations can be found on the NIOSH web site at http://www.cdc.gov/niosh/homepage.html. NIOSH approved respirators, manufacturers, and phone numbers are also listed on this web site.
  - Wear long-sleeved, loose fitting clothing, gloves, and eye protection.
- ❑ Apply enough water to the combustion chamber lining or base insulation to prevent airborne dust.
- ❑ Remove combustion chamber lining or base insulation from the boiler and place it in a plastic bag for disposal.
- ❑ Wash potentially contaminated clothes separately from other clothing. Rinse clothes washer thoroughly.

NIOSH stated First Aid

- ❑ Eye: Irrigate immediately
- ❑ Breathing: Fresh air

REMOVAL OR INSTALLATION OF FIBERGLASS WOOL

WARNING This product contains fiberglass jacket insulation and ceramic fiber materials in combustion chamber lining or base panels in gas fired products. Airborne fibers from these materials have been listed by the State of California as a possible cause of cancer through inhalation.

- ❑ Avoid breathing dust and contact with skin and eyes.
  - Use NIOSH certified dust respirator (N95). This type of respirator is based on the OSHA requirements for fiberglass wool at the time this document was written. Other types of respirators may be needed depending on the job site conditions. Current NIOSH recommendations can be found on the NIOSH web site at http://www.cdc.gov/niosh/homepage.html. NIOSH approved respirators, manufacturers, and phone numbers are also listed on this web site.
  - Wear long-sleeved, loose fitting clothing, gloves, and eye protection.
- ❑ Operations such as sawing, blowing, tear out, and spraying may generate airborne fiber concentration requiring additional protection.
- ❑ Wash potentially contaminated clothes separately from other clothing. Rinse clothes washer thoroughly.

NIOSH stated First Aid

- ❑ Eye: Irrigate immediately
- ❑ Breathing: Fresh air

Installation and service certificate

Boiler model _____ Series _____ CP number _____ Date installed _____

Measured Btuh input _____

- ☐ Installation instructions have been followed.
- ☐ Check-out sequence has been performed.
- ☐ Above information is certified to be correct.
- ☐ Information received and left with owner/maintenance person.

Installer _____ _____ _____
(company) (address) (phone)

_____
(installer's signature)

W-T
8201 W. Calumet Rd.
Milwaukee, WI 53223

Part number 550-142-056/0411